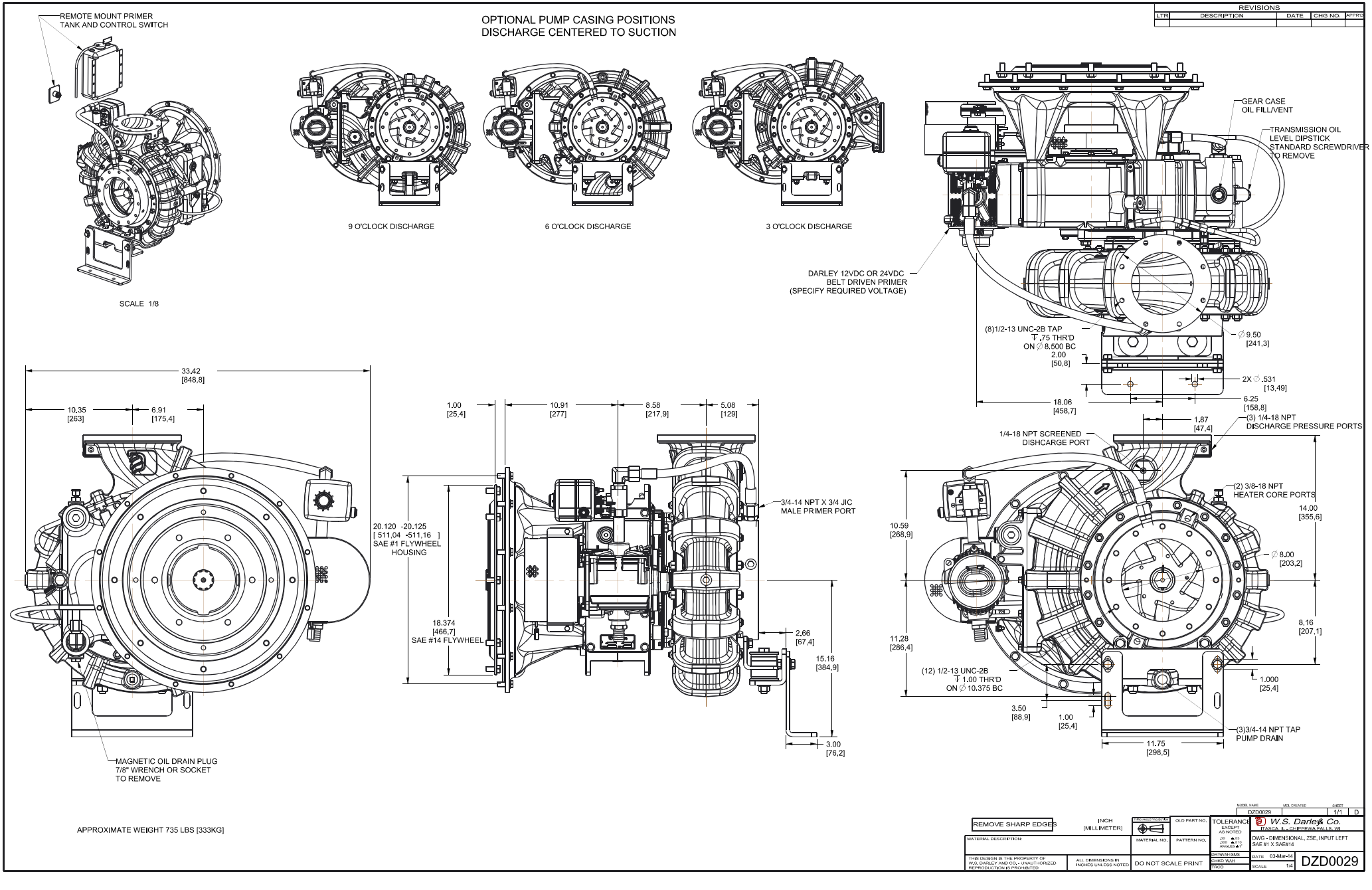

REVISIONS
LTR
DESCRIPTION
DATE
CHG NO.
APPR'D
OPTIONAL PUMP CASING POSITIONS
DISCHARGE CENTERED TO SUCTION
REMOTE MOUNT PRIMER
TANK AND CONTROL SWITCH
SCALE 1/8
9 O'CLOCK DISCHARGE
6 O'CLOCK DISCHARGE
3 O'CLOCK DISCHARGE
GEAR CASE
OIL FILL/VENT
TRANSMISSION OIL
LEVEL DIPSTICK
STANDARD SCREWDRIVER
TO REMOVE
DARLEY 12VDC OR 24VDC
BELT DRIVEN PRIMER
(SPECIFY REQUIRED VOLTAGE)
(8)1/2-13 UNC-2B TAP
⊤ .75 THR'D
ON ∅ 8.500 BC
2.00
[50,8]
∅ 9.50
[241,3]
2X ∅ .531
[13,49]
18.06
[458,7]
6.25
[158,8]
33.42
[848,8]
10.35
[263]
6.91
[175,4]
1.00
[25,4]
10.91
[277]
8.58
[217,9]
5.08
[129]
1.87
[47,4]
(3) 1/4-18 NPT
DISCHARGE PRESSURE PORTS
1/4-18 NPT SCREENED
DISHCARGE PORT
(2) 3/8-18 NPT
HEATER CORE PORTS
14.00
[355,6]
10.59
[268,9]
∅ 8.00
[203,2]
20.120 -20.125
[511,04 -511,16]
SAE #1 FLYWHEEL
HOUSING
3/4-14 NPT X 3/4 JIC
MALE PRIMER PORT
18.374
[466,7]
SAE #14 FLYWHEEL
2.66
[67,4]
15.16
[384,9]
8.16
[207,1]
11.28
[286,4]
(12) 1/2-13 UNC-2B
⊤ 1.00 THR'D
ON ∅ 10.375 BC
1.000
[25,4]
3.50
[88,9]
1.00
[25,4]
(3)3/4-14 NPT TAP
PUMP DRAIN
11.75
[298,5]
3.00
[76,2]
MAGNETIC OIL DRAIN PLUG
7/8" WRENCH OR SOCKET
TO REMOVE
APPROXIMATE WEIGHT 735 LBS [333KG]
MODEL NAME
DZD0029
MDL CREATED
SHEET
1/1
D
REMOVE SHARP EDGES
INCH
[MILLIMETER]
OLD PART NO.
TOLERANCE
EXCEPT
AS NOTED
.XX ±.03
.XXX ±.010
ANGLES ±1°
W.S. Darley & Co.
ITASCA, IL - CHIPPEWA FALLS, WI
MATERIAL DESCRIPTION:
MATERIAL NO.
PATTERN NO.
DWG - DIMENSIONAL, ZSE, INPUT LEFT
SAE #1 X SAE#14
THIS DESIGN IS THE PROPERTY OF
W.S. DARLEY AND CO. - UNAUTHORIZED
REPRODUCTION IS PROHIBITED
ALL DIMENSIONS IN
INCHES UNLESS NOTED
DO NOT SCALE PRINT
CH'N/WH:SMS
CHKD:WAH
TRCD
DATE 03-Mar-14
SCALE 1/4
DZD0029