NOTES:
1) ONLY SHIFT PUMP WHEN DRIVELINE IS NOT SPINNING
2) APPROXIMATE WEIGHT: 544 LBS [247 KG]

ASSEMBLIES SHOWN:
CAST IRON PUMP - PT01002
TRANSMISSION - TM00240
CAST IRON GEAR CASE - 1804204
INPUT FLANGE - AU01006
OUTPUT FLANGE - 4815013
TRANSMISSION COOLER - AM00401
TRANSMISSION COOLER - AM00403
GEAR RATIO 2.12:1 - KR07701
RV FLANGE - YF00601
PUMP SHIFT - AH00403
NO BRAKE - AB00403
SHIFT INTERLOCK - AH00600
SUCTION - YF01504

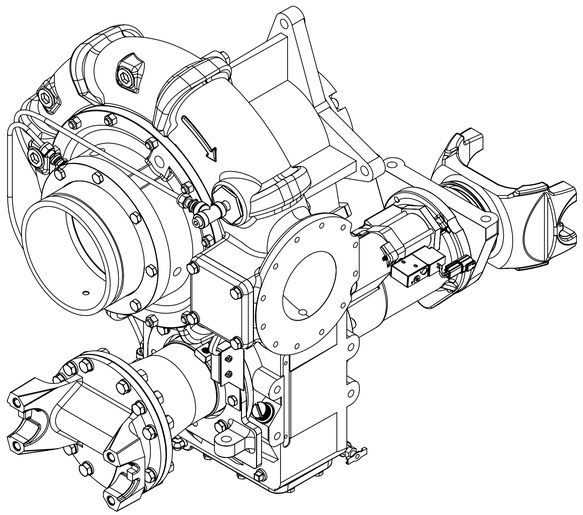

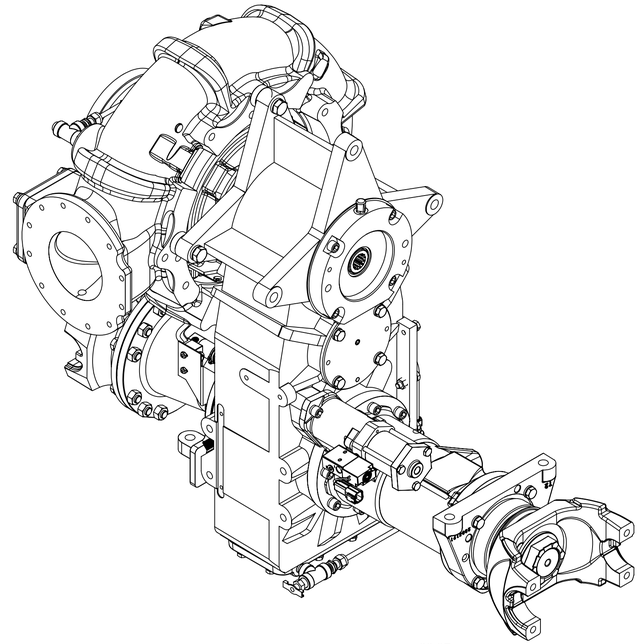

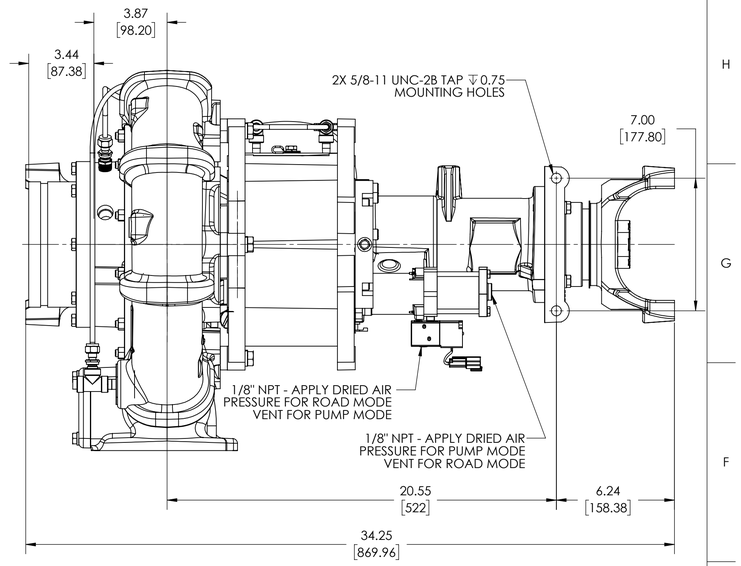

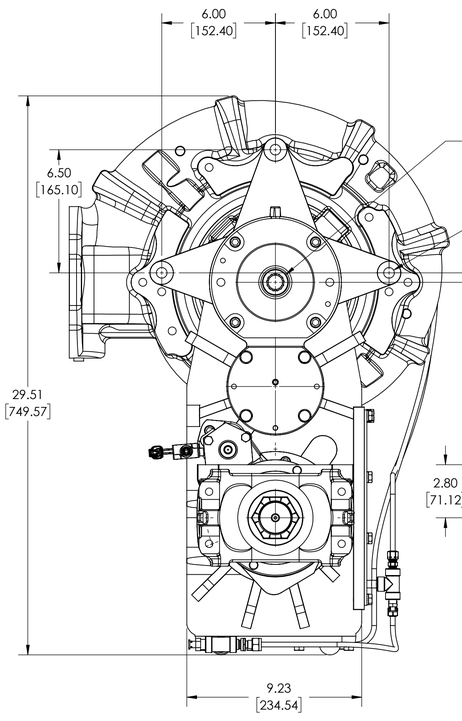

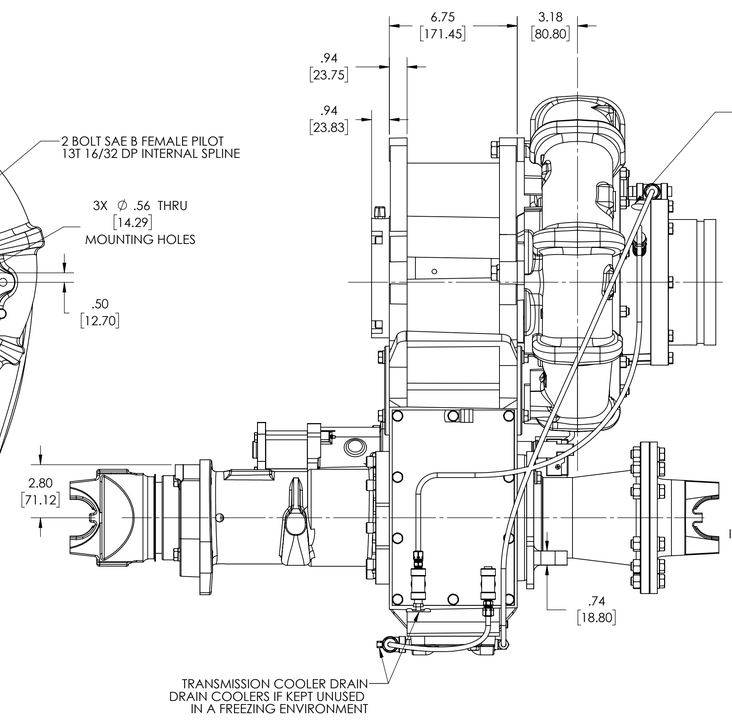

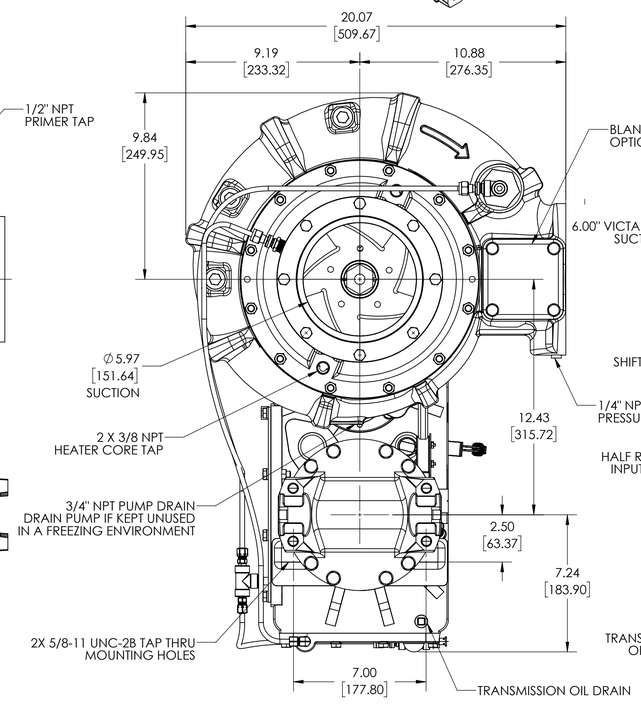

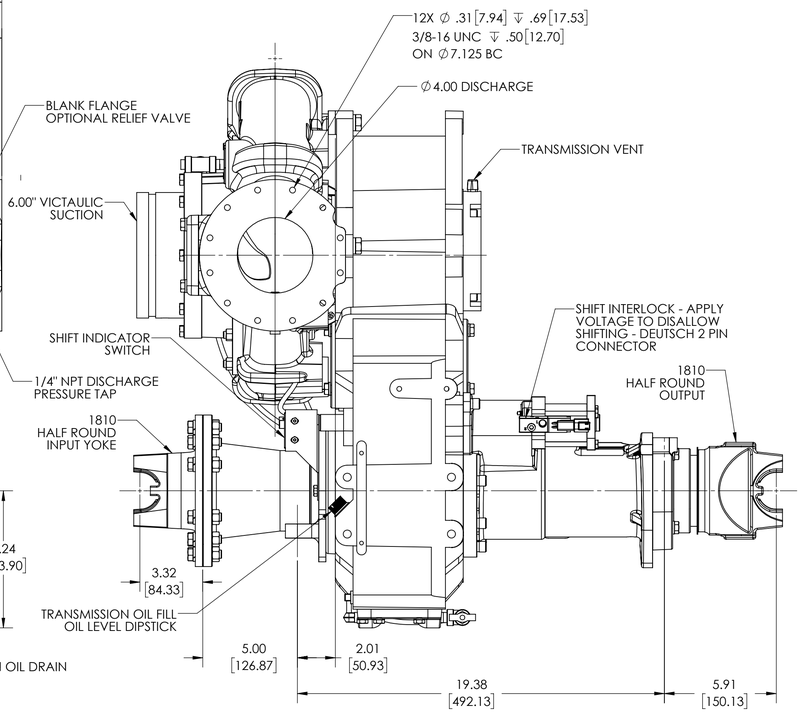

REMOVE SHARP EDGES	INCH [MILLIMETER]	THIRD ANGLE PROJECTION	OLD PART NO.	TOLERANCE EXCEPT AS NOTED .00 ±.03 .000 ±.010 ANGLES ±1	Darley ITASCA, IL CHIPPEWA FALLS, WI
MATERIAL DESCRIPTION	MASS	MATERIAL NO.	PATTERN NO.		DWG - TSM, PUMP FORWARD
	540.35 LBS			DRWN SMS	1810 HR, VIC SUCTION, 3 OCLOCK
THIS DESIGN IS THE PROPERTY OF WS. DARLEY CO. - UNAUTHORIZED REPRODUCTION IS PROHIBITED	ALL DIMENSIONS IN INCHES UNLESS NOTED	DO NOT SCALE PRINT		CKHD WAH	DATE: 9/8/2021 DTD1014
				TRCD	SCALE: 1:4

MODEL	SHEET	
dtd1014	1/1	D