Operator's Manual Table of Contents For Darley Midship/Split Shaft PTO

IF FURTHER INFORMATION IS NEEDED, CALL W.S. DARLEY & CO. AT CHIPPEWA FALLS, WI. AT 800-634-7812 or 715-726-2650

This manual is for DARLEY SPLIT SHAFT PTO:

Model: **HD / XHD SPLIT SHAFT PTO** Transmission Serial Number: _____

OPERATION AND MAINTENANCE OF TYPE HD/XHD SPLIT SHAFT PTO

Lubrication

Keep the gear case filled with oil to the level of the oil level plug, which is marked on the gear case.

Check the oil level every 25 hours or every six month, and change it every 50 hours or 12 months.

Use 80W/90 gear lube oil - not grease - in the PTO transmission.

CAUTION: Do not overfill.

Inject grease in zerk fittings on the driveline universal joints once a year.

Operation of PTO

The PTO gear shift consists of a sliding clutch gear splined to the transmission shaft which can be moved forward to engage the PTO clutch gear or to the rear to engage the rear drive shaft connected to the truck drive axle. A neutral position is half way between.

The sliding clutch gear is moved either by direct mechanical linkage from a shift lever, or air powered cylinder controlled by a selector switch. The shift lever must be moved all the way and locked into either ROAD position to drive the truck, or PTO position to power the PTO.

The truck clutch must always be disengaged to stop the rotation of the truck transmission output shaft before shifting into either ROAD or PTO gear to prevent clashing and damaging the gear teeth. With the manual shift lever, a butt tooth position of gears may be encountered occasionally preventing engagement. If this occurs, move PTO shift lever to neutral (half way) position, engage truck clutch momentarily, then disengage the truck clutch and try to shift the PTO again.

The PTO is always operated with the truck transmission in direct (high) gear, such as 4th on a 4-speed, or 5th on a 5-speed manual transmission, and D or 2.5 on an automatic transmission.

Rev. 3
Date: 02/15/06
Rev Date: 10/09/07
1200538.doc

REVISIONS				
LTR	DESCRIPTION	DATE	CHG NO.	APPR'D
A	2301305 BRG BRKT WAS 2301304	7/30/98	98-194	DLL
B	ADDED O-RING	06/05/02	2002-114	JSS
C	ADDED WATER FLINGER	05/10/04	2004-111	JSS

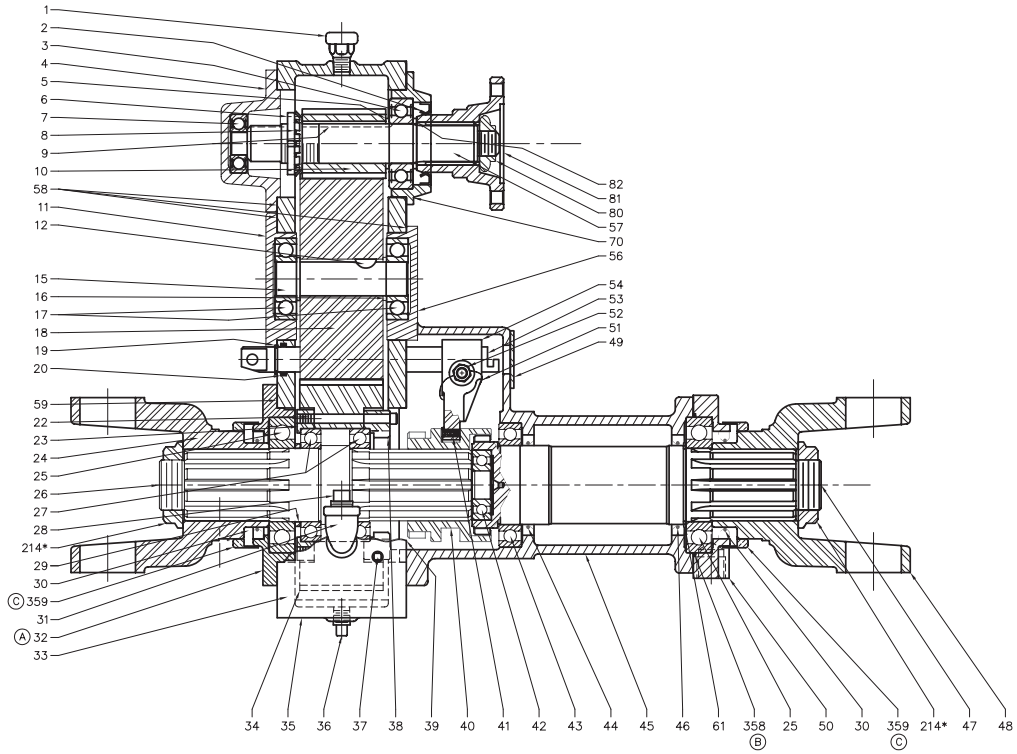

REP#	NAME OF PART	QTY
1	GEAR CASE VENT	1
2	OIL SEAL – OUTPUT SHAFT	1
3	BEARING – OUTPUT SHAFT	1
4	BEARING CAP	1
5	GEAR SPACER – .203 WIDE	1
6	BEARING LOCKNUT	1
7	BEARING	1
8	BEARING LOCKWASHER	1
9	PINION KEY	1
10	PINION GEAR	1
11/56	BEARING CAP – IDLER	1
12	WOODRUFF KEY – IDLER	1
15	IDLER SHAFT	1
16	SPACER – IDLER GEAR	1
17	BEARING – IDLER SHAFT	2
18	IDLER GEAR	1
19	RETAINING RING	1
20	O'RING – SHIFT BAR	1
22	GRADE 8 SOCKET HEAD CAP SCREWS	6
23	BEARING RETAINER	1
24	DRIVE YOKE	1
25	BEARING – DRIVE SHAFT	2
26	FRONT DRIVE SHAFT	1
27	BEARING – DRIVE GEAR	2
28	OIL FILL PLUG – 3/8NPT	1
29	BEARING SPACER – DRIVE SHAFT	1
30	OIL SEAL	2
31	90° ELBOW – OIL FILL	1
A 32	FRONT BEARING BRACKET	1
33	GEARCASE COVER	1
34	DRIVE GEAR	1
35	GEARCASE	1
36	OIL DRAIN PLUG – 3/8NPT MAGNETIC	1
37	OIL LEVEL PLUG – 3/8NPT	1
38	CLUTCH GEAR	1
39	GASKET – GEARCASE COVER	1
40	SLIDING CLUTCH GEAR	1
41	OIL WICK PELLET	6
42	PILOT BEARING	1
43	BEARING – REAR DRIVE SHAFT	1
44	OIL SEAL	1
45	REAR BEARING BRACKET	1
46	OIL SEAL	1
47	REAR DRIVE SHAFT	1
48	REAR DRIVE YOKE	1
49	COVER – POWER SHIFT OPENING (POWER SHIFT CYLINDER OPTIONAL)	1
50	BEARING CAP	1
51	SAFETY WIRE	10"
52	LOCK BOLT – SHIFT YOKE	1
53	SHIFT BAR	1
54	SHIFT YOKE	1
56/11	BEARING CAP – IDLER	1
57	OUTPUT SHAFT	1
58	GASKET	3
59	GASKET – FRONT BEARING BRACKET	1
61	SPACER	1
70	BEARING BRACKET – OUTPUT SHAFT	1
80	NUT – OUTPUT FLANGE – 7/8 NYLOC	1
81	1410 COMPANION FLANGE – OUTPUT	1
82	FLANGE SPACER – .125 WIDE	1
214*	NUT	2
B 358	O-RING	1
C 359	WATER DLINGER	2

*TORQUE YOKE NUT
TO 150–200 lb–ft

MIDSHIP PTO W/2.5" DRIVE SHAFT— TP00705

OLD PART NO. –

INCH [MILLIMETER]

THIRD ANGLE PROJECTION

W.S. DARLEY & Co.
MELROSE PARK, IL – CHIPPEWA FALLS, WI

DWG – KDM HD PTO, ENG ROT
2.5" SHAFT, LOCKON

DRN. TED
CHKD
TRCD
DATE JUL14,97
SCALE 1/2

DKCI502

ALL DIMENSIONS IN INCHES UNLESS NOTED

DO NOT SCALE PRINT

Prepared By: EAP
Revised By: EAP
Approved By: TED

REVISIONS				
LTR	DESCRIPTION	DATE	CHG NO.	APPR'D
A	2301305 BRG BRKT WAS 2301304	7/30/98	98-194	DLL
B	ADDED O-RING	06/05/02	2002-114	JSS
C	ADDED WATER FLINGER	05/10/04	2004-111	JSS

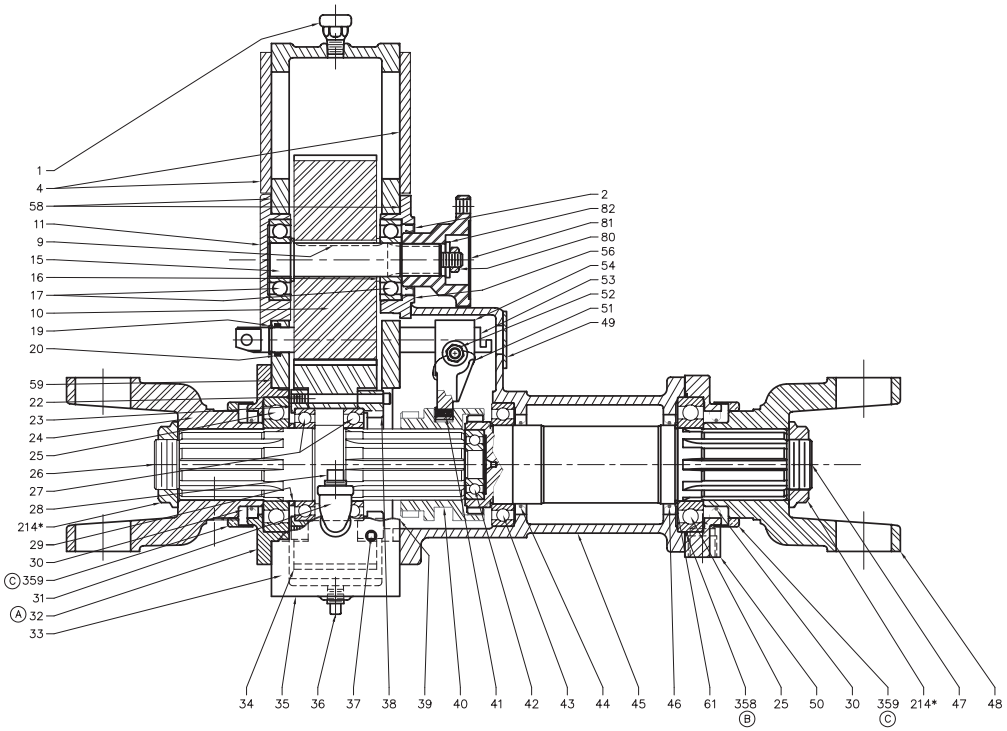

REP#	NAME OF PART	QTY
1	GEAR CASE VENT	1
2	OIL SEAL – OUTPUT SHAFT	1
4	BEARING CAP	2
9	DRIVE KEY – OUTPUT SHAFT	1
10	PINION GEAR	1
11	BEARING CAP – OUTPUT SHAFT	1
15	OUTPUT SHAFT	1
16	SPACER – PINION GEAR	1
17	BEARING – OUTPUT SHAFT	2
19	RETAINING RING	1
20	O'RING – SHIFT BAR	1
22	GRADE 8 SOCKET HEAD CAP SCREWS	6
23	BEARING RETAINER	1
24	DRIVE YOKE	1
25	BEARING – DRIVE SHAFT	2
26	FRONT DRIVE SHAFT	1
27	BEARING – DRIVE GEAR	2
28	OIL FILL PLUG – 3/8NPT	1
29	BEARING SPACER – DRIVE SHAFT	1
30	OIL SEAL	2
31	90° ELBOW – OIL FILL	1
A 32	FRONT BEARING BRACKET	1
33	GEARCASE COVER	1
34	DRIVE GEAR	1
35	GEARCASE	1
36	OIL DRAIN PLUG – 3/8NPT MAGNETIC	1
37	OIL LEVEL PLUG – 3/8NPT	1
38	CLUTCH GEAR	1
39	GASKET – GEARCASE COVER	1
40	SLIDING CLUTCH GEAR	1
41	OIL WICK PELLET	6
42	PILOT BEARING	1
43	BEARING – REAR DRIVE SHAFT	1
44	OIL SEAL	1
45	REAR BEARING BRACKET	1
46	OIL SEAL	1
47	REAR DRIVE SHAFT	1
48	REAR DRIVE YOKE	1
49	COVER – POWER SHIFT OPENING (POWER SHIFT CYLINDER OPTIONAL)	1
50	BEARING CAP	1
51	SAFETY WIRE	10"
52	LOCK BOLT – SHIFT YOKE	1
53	SHIFT BAR	1
54	SHIFT YOKE	1
56	BEARING BRACKET – OUTPUT SHAFT	1
58	GASKET	2
59	GASKET – FRONT BEARING BRACKET	1
61	SPACER	1
80	NUT – OUTPUT FLANGE	1
81	COMPANION FLANGE – OUTPUT	1
82	FLANGE WASHER	1
214*	NUT	2
B 358	O-RING	1
C 359	WATER FLINGER	2

*TORQUE YOKE NUT TO 150–200 lb–ft

MIDSHIP PTO W/2.5" DRIVE SHAFT — TP00704

MATERIAL DESCRIPTION: –	MATERIAL NO. –	PATTERN NO. –	OLD PART NO. –
THIS DESIGN IS THE PROPERTY OF W.S. DARLEY AND CO. – UNAUTHORIZED REPRODUCTION IS PROHIBITED	ALL DIMENSIONS IN INCHES UNLESS NOTED	DO NOT SCALE PRINT	

TOLERANCE EXCEPT AS NOTED .00 ±.03 .000 ±.010 ANGLES ±1°

DRN TED
CHKD
TRCD

INCH [MILLIMETER]

THIRD ANGLE PROJECTION

W.S. DARLEY & Co.
MELROSE PARK, IL – CHIPPEWA FALLS, WI

DWG – KDM HD PTO, OP ENG ROT 2.5" SHAFT, LOCKON

DATE JUL14,97
SCALE 1/2

DKC1503

Prepared By: EAP
Revised By: EAP
Approved By: TED

Rev. 3
Date: 02/15/06
Rev Date: 10/09/07
1200538.doc

REP#	NAME OF PART	QTY
1	PIPE ELBOW	1
2	PINION GEAR	1
3	KEY – PINION GEAR	1
4	COVER	1
5	SPACER	1
8	PTO OUTPUT SHAFT	1
9	BEARING CAP – OUTPUT	1
13	BALL BEARING	2
14	IDLER BEARING CAP GASKET	1
15	SHIFT BAR O'RING	1
16	CLUTCH SHIFT BAR	1
17	RETAINING RING – SHIFT BAR	1
18	DRIVE GEAR	1
19	BEARING RETAINER	1
20	TRANSMISSION SHAFT	1
21	TRANS. SHAFT SPACER	1
22	BALL BEARING	2
24	OIL SEAL – YOKE 2 15/16 DIA	1
25	FRONT BEARIING BRACKET	1
26	BALL BEARING	1
27	FRONT BEARING BRACKET GASKET	1
28	DRAIN PLUG – MAGNETIC 3/8	1
29	GEARCASE COVER GASKET	1
30	HEX HD CAP SCREW	12
31	GEARCASE COVER PLATE	1
32	DRIVE GEAR BOLT	6
34	PUMP CLUTCH GEAR	1
35	SLIDING CLUTCH GEAR	1
36	BALL BEARING	1
37	BALL BEARING	1
38	OIL SEAL	1
39	GREASE ZERK	1
40	OIL SEAL	1
41	BALL BEARING	1
42	BEARING CAP – REAR	1
43	BEARING BACK UP WASHER	1
44	YOKE	2
45	COVER	1
46*	LOCK NUT, YOKE	2
47	NUT	1
48	REAR DRIVE SHAFT	1
49	OIL SEAL	1
50	SAFETY WIRE	1
51	REAR BEARING BRACKET	1
52	LOCK BOLT, SHIFT YOKE	1
53	CLUTCH SHIFT YOKE	1
54	TACHOMETER PLUG	1
55	TACH CABLE DRIVE NUT	1
56	OIL SEAL – TACH SHAFT	1
57	BEARING CAP – IDLER	1
58	IDLER BEARING CAP GASKET	1
59	PTO OUTPUT FLANGE	1
60	OIL SEAL	1
61	PIPE PLUG	2
65	VENT PLUG – 1/8 NPT	1
66	GEARCASE	1
68	WASHER	1
Ⓐ 358	O-RING	1
Ⓑ 359	WATER FLINGER	2

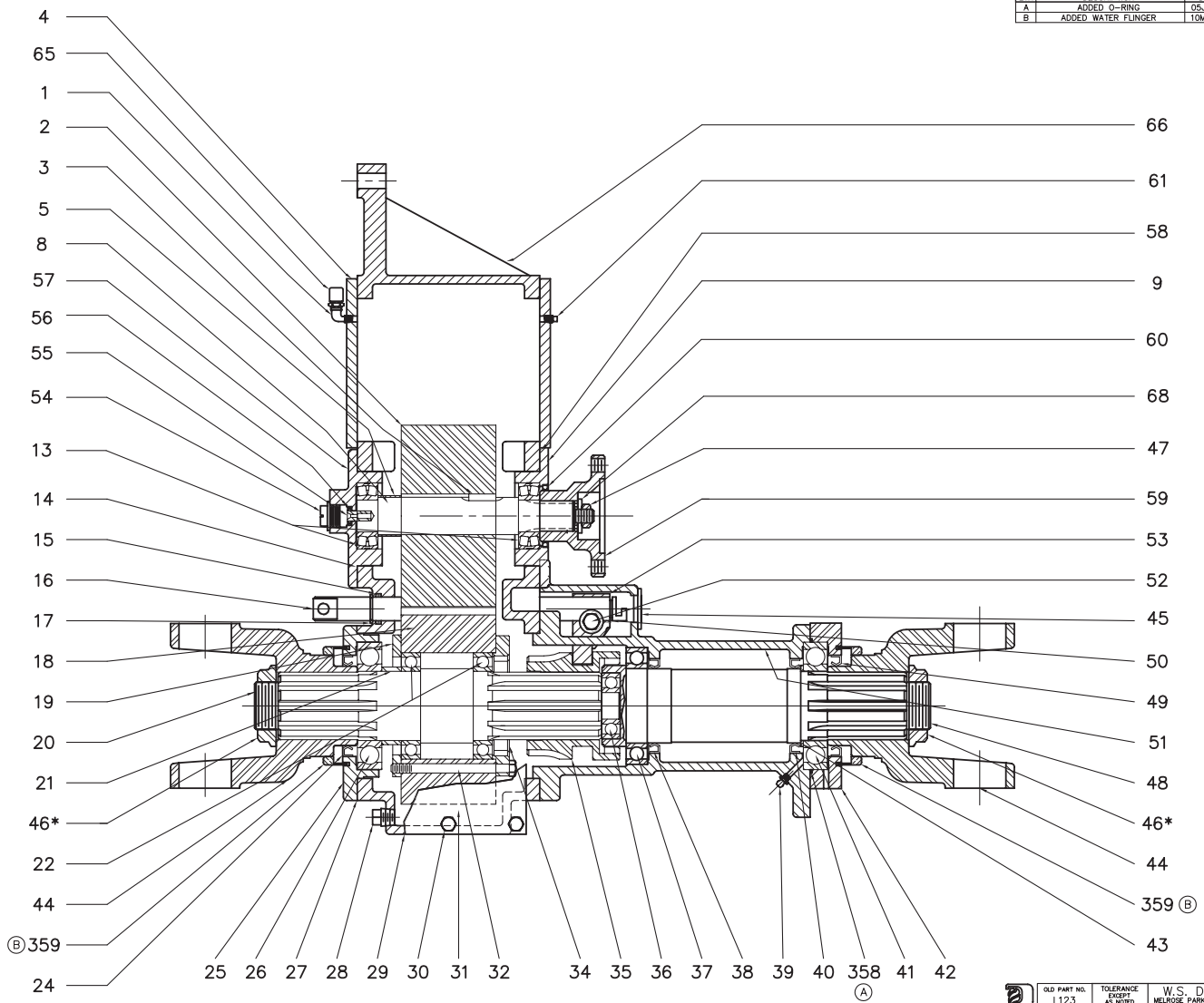

*TORQUE YOKE NUT
TO 150–200 lb–ft

REVISIONS				
LTR	DESCRIPTION	DATE	CHG NO.	APPR'D
A	ADDED O-RING	05JUN02	2002-114	JSS
B	ADDED WATER FLINGER	10MAY04	2004-111	JSS

LDMTA29 TRCD: CKE 083095

MATERIAL DESCRIPTION: –
MATERIAL NO. –
PATTERN NO. –
OLD PART NO. L123
TOLERANCE EXCEPT AS NOTED FRAC DIM ±.01 .X ±.01 .XXX ±.005 ANGLES ±1°
DRN S. LEE
CHKD
TRCD MCR
THIS DESIGN IS THE PROPERTY OF W.S. DARLEY AND CO. – UNAUTHORIZED REPRODUCTION IS PROHIBITED
ALL DIMENSIONS IN INCHES UNLESS NOTED
DO NOT SCALE PRINT

W.S. DARLEY & CO.
MELROSE PARK, IL – CHIPPEWA FALLS, WI
LDM PTO, OP ENG ROT
CROSS SECTION
DATE MAR14,90
SCALE 1/2
DLC0200

REVISIONS				
LTR	DESCRIPTION	DATE	CHG NO.	APPR'D
A	ADDED O-RING	05JUN02	2002-114	JSS
B	ADDED WATER FLINGER	10MAY04	2004-111	JSS

REP#	NAME OF PART	QTY
2	PINION GEAR	1
3	KEY – PINION GEAR	1
4	BEARING HOUSING	1
5	PINION SPACER	1
6	BALL BEARING	1
7	IDLER GEAR	1
8	IDLER GEAR SHAFT	1
9	BEARING CAP – IDLER	1
10	KEY – IDLER GEAR	1
11	IDLER GEAR SPACER	1
13	BALL BEARING	2
14	IDLER BEARING CAP GASKET	1
15	SHIFT BAR O'RING	1
16	CLUTCH SHIFT BAR	1
17	RETAINING RING – SHIFT BAR	1
18	DRIVE GEAR	1
19	BEARING RETAINER	1
20	TRANSMISSION SHAFT	1
21	TRANS. SHAFT SPACER	1
22	BALL BEARING	2
24	OIL SEAL – YOKE 2 15/16 DIA	1
25	FRONT BEARIING BRACKET	1
26	BALL BEARING	1
27	FRONT BEARING BRACKET GASKET	1
28	DRAIN PLUG – MAGNETIC 3/8	1
29	GEARCASE COVER GASKET	1
30	HEX HD CAP SCREW	12
31	GEARCASE COVER PLATE	1
32	DRIVE GEAR BOLT	6
34	PUMP CLUTCH GEAR	1
35	SLIDING CLUTCH GEAR	1
36	BALL BEARING	1
37	BALL BEARING	1
38	OIL SEAL	1
39	GREASE ZERK	1
40	OIL SEAL	1
41	BALL BEARING	1
42	BEARING CAP – REAR	1
43	BEARING BACK UP WASHER	1
44	YOKE	2
45	COVER	1
46*	LOCK NUT, YOKE	2
47	LOCK NUT, FLANGE	1
48	REAR DRIVE SHAFT	1
49	OIL SEAL	1
50	SAFETY WIRE	1
51	REAR BEARING BRACKET	1
52	LOCK BOLT, SHAFT YOKE	1
53	CLUTCH SHIFT YOKE	1
54	TACHOMETER PLUG	1
55	TACH CABLE DRIVE NUT	1
56	OIL SEAL – TACH SHAFT	1
57	BEARING CAP – IDLER	1
58	IDLER BEARING CAP GASKET	1
59	PTO OUTPUT FLANGE	1
60	OIL SEAL	1
61	BALL BEARING	1
62	FRONT BEARING CAP GASKET	1
63	PTO OUTPUT SHAFT	1
65	VENT PLUG – 1/8 NPT	1
66	GEARCASE	1
67	OUTPUT FLANGE BEARING HOUSING	1
Ⓐ 358	O-RING	1
Ⓑ 359	WATER FLINGER	2

*TORQUE YOKE NUT TO 150–200 lb–ft

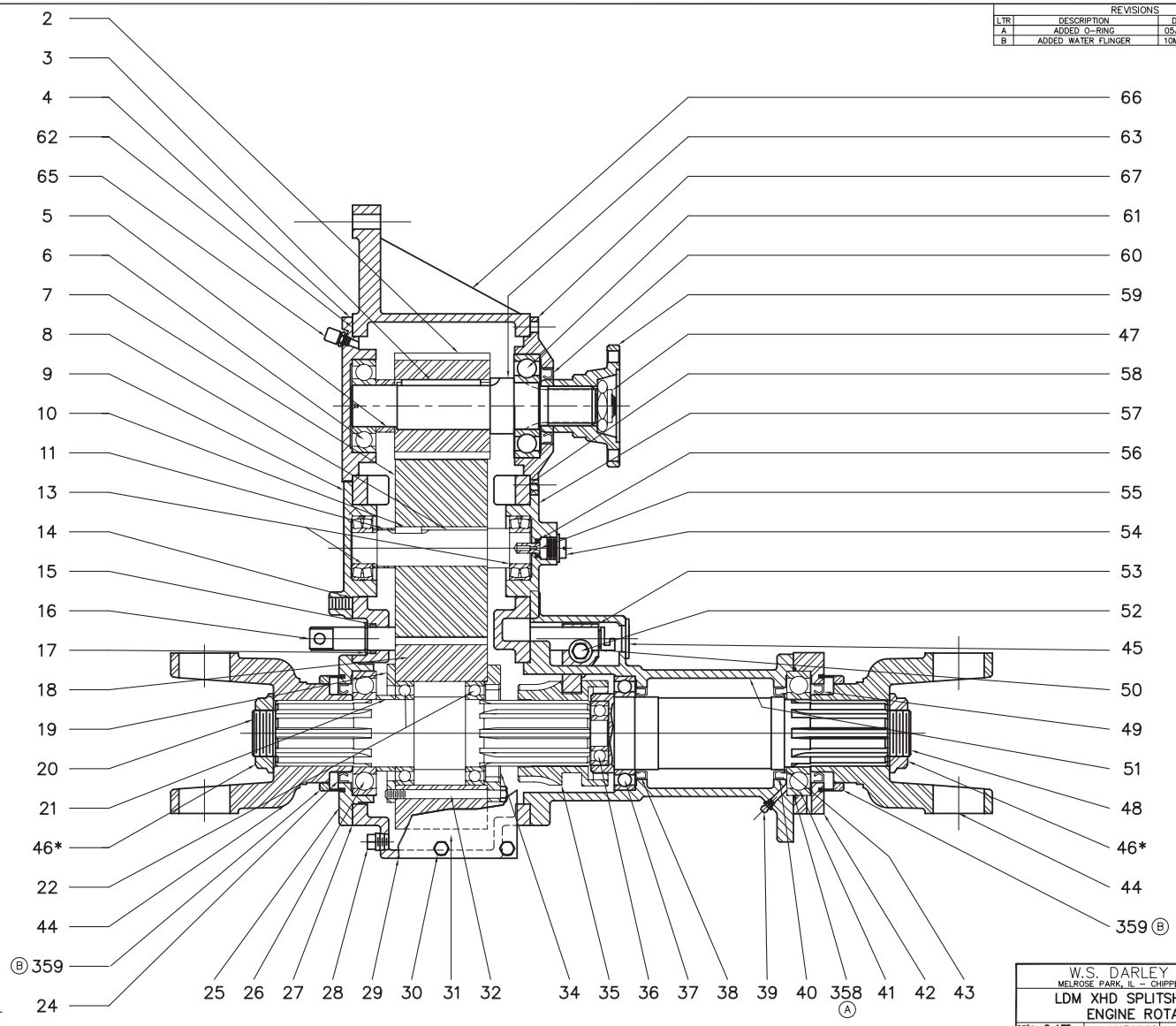

W.S. DARLEY & CO.
MELROSE PARK, IL – CHIPPEWA FALLS, WI

LDM XHD SPLITSHAFT PTO
ENGINE ROTATION

DR'N S. LEE
CHKD
TRCD MCR
DATE MAR14,90
SCALE 1/2
OLD PART NO. L116
DLC0201

Prepared By: EAP
Revised By: EAP
Approved By: TED

Rev. 3
Date: 02/15/06
Rev Date: 10/09/07
1200538.doc

NO.	DESCRIPTION	PART NO.	QTY.
1	GEAR - PINION, N, 8DP, 20 PA	-	1
2	GEAR - DRIVE, PSP, 8DP, 20DEG PA	-	1
3	KEY - SQ., 0.38 X 2.50	-	1
4	HOUSING - BEARING, N, OUTBOARD	-	1
5	SPACER - 1.57 X 2.00 X 0.71	-	1
6	BEARING-BALL	-	1
8	SHAFT - IDLER GEAR, N	-	1
9	BEARING CAP, IDLER	-	1
10	KEY - SQ., 0.25 X 2.50 GR2	-	1
11	SPACER - 1.75 X 2.0 X 1.43	-	1
12	SHAFT - OUTPUT, PTO	-	1
13	BEARING - 22206 PC-3	-	2
14	O-RING - 3.50 x 3.69 X 0.09	-	2
15	O-RING - 0.88 x 1.12 x 0.12	-	1
16	SHIFT BAR - PSM	-	1
17	RING - RETAINER, 5160-87	-	1
18	GEAR - DRIVE, N, 8DP, 20 DEGREE PA	-	1
20	SHAFT - TRANSMISSION	-	1
21	SPACER - 2.56 x 2.88 x 1.58	-	1
22	BEARING-BALL, 113KSFF	-	2
25	BRACKET - BEARING, FRONT, N	-	1
26	BEARING-BALL, 213SF	-	1
27	O-RING - 5.00 x 5.25 x 0.12	-	2
28	PLUG - PIPE, 0.375, MAG SQ HD	-	1
35	GEAR - SLIDING CLUTCH, N	-	1
36	BEARING-BALL, 305SFF	-	1
37	BEARING-BALL, 114KSFC0	-	1
39	OIL SEAL - 2.000 ID X 2.879 OD	-	1
40	OIL SEAL - 2.750 ID X 3.505 OD	-	2
41	BEARING-BALL, 213SFF	-	1
42	REAR BEARING CAP, N	-	1
43	WASHER - 2.56 x 3.00 x .09 STL	-	1
44	END YOKE	-	2
46	LOCKNUT	-	2
47	NUT - FLANGE, 7/8-14	-	1
48	SHAFT - TRANSMISSION	-	1
49	OIL SEAL - 2.938 ID X 3.756 OD	-	2
50	WIRE - SAFETY	-	1
51	BRACKET - BEARING, REAR NO BRK	-	1
52	LOCK BOLT - SHIFT BAR	-	1
53	SHIFT YOKE	-	1
54	PLUG - TACH, .88-18UNS	-	1
55	NUT - CABLE DRIVE, KDM, 0.104	-	1
56	OIL SEAL - 0.375 ID X 0.688 OD	-	1
57	CAP - BEARING, IDLER, TACH	-	1
59	COMP FLANGE - 1410	-	1
61	BEARING-BALL, 309SFF	-	1
65	VENT	-	1
66	GEARCASE - LDMH/LDMC, PUMP FWD	-	1
67	CAP - BEARING, PUMP SHAFT	-	1
101	HHCS - .375-16 x 0.88, GR5	-	8
102	WASHER - LOCK, 0.375 ID	-	24
103	HHCS - .500-13 x 1.75, GR5	-	3
104	SHCS - .375-16 x 1.00, GR8	-	1
105	SHCS - .375-16 x 1.25, GR8	-	7
106	HHCS - .375-16 x 1.25, GR5	-	4
107	HHCS - .375-16 x 1.75, GR5	-	4
108	WASHER - LOCK, 0.500 ID	-	3
109	WASHER - LOCK, HC, 0.375 ID	-	8
110	HHCS - .375-16 x 1.00, GR5	-	8
120	SPACER - 1.75 X 2.40 X 0.86	-	1
124	PIN - DOWEL, .250 X 0.62, GR8	-	2
358	O-RING - 4.50 x 4.69 x 0.09	-	1
359	FLINGER - WATER	-	2
362	PELLET - OIL WICK	-	6
363	O-RING - 20MM x 25MM x 2.5MM	-	1
365	AIR CYLINDER - 1.75 BORE	-	1
366	DIPSTICK - M22x2.5 THR'D	-	1
368	SPACER - 1.19 x 2.00 x .25	-	1
369	RING - RETAINER, N5000-393	-	1
372	TRANSMISSION COVER ASSEMBLY	-	1

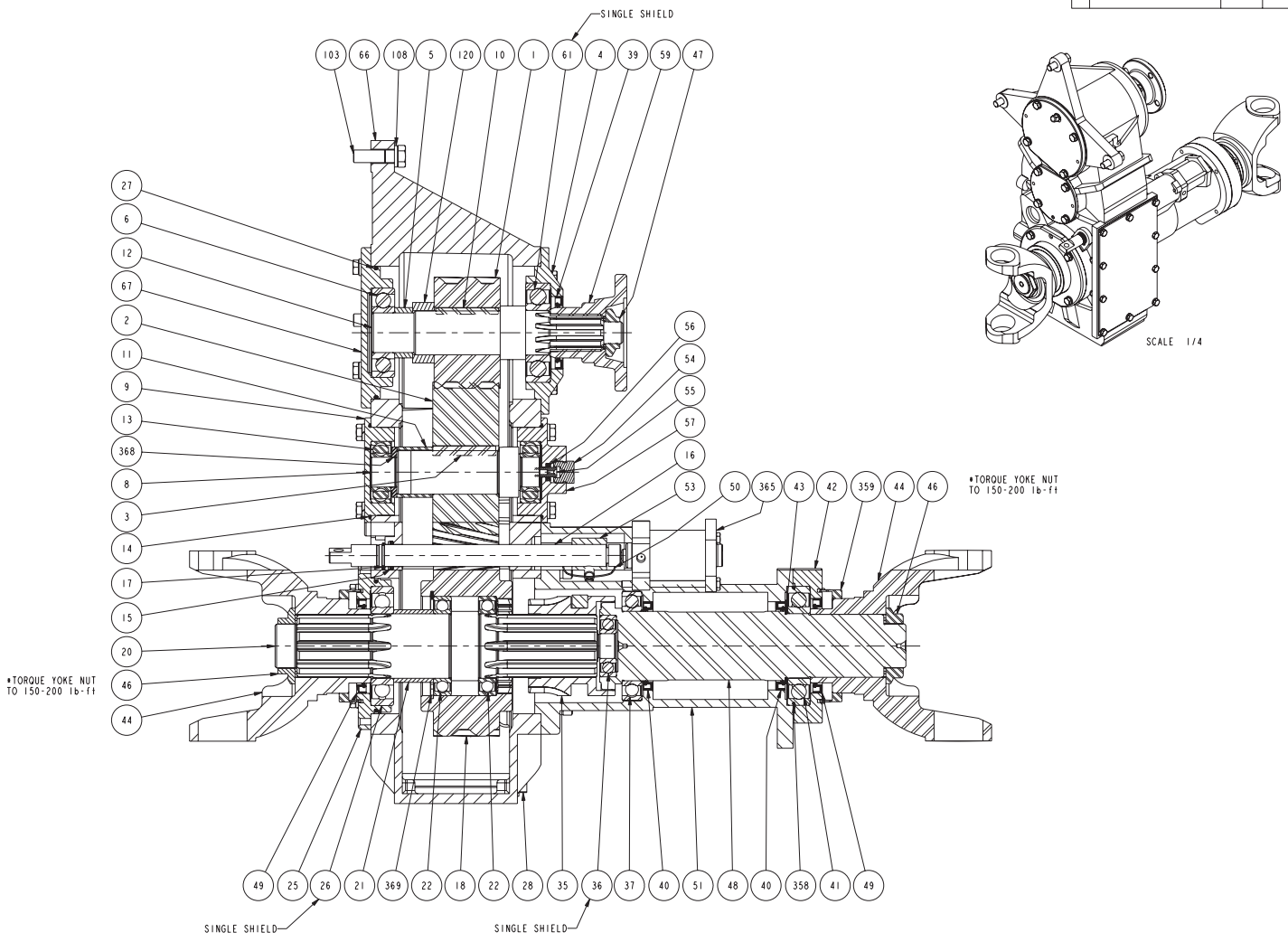

NOTE: DIPSTICK, OIL WICK PELLETS, DOWEL PINS AND FASTENERS SHOWN ON EXPLODED VIEW (SHEET 2)
NOTE: BEARINGS WITH SINGLE SHIELDS - SHIELDED SIDE GOES TOWARD OUTSIDE OF TRANSMISSION

REVISIONS				
LTR	DESCRIPTION	DATE	CHG NO.	APPR'D

REMOVE SHARP EDGES

INCH [MILLIMETER]

THIRD ANGLE PROJECTION

OLD PART NO.

TOLERANCE EXCEPT AS NOTED .00 ±.03 .000 ±.010 ANGLES ±1°

MATERIAL DESCRIPTION: -

MATERIAL NO. -

PATTERN NO. -

DR'N EBH
CHKD MAR
TRCD

THIS DESIGN IS THE PROPERTY OF W.S. DARLEY AND CO. - UNAUTHORIZED REPRODUCTION IS PROHIBITED

ALL DIMENSIONS IN INCHES UNLESS NOTED

DO NOT SCALE PRINT

MODEL NAME: DLC0205 | MDL CREATED: 1-JUL-05 | SHEET: 1/2 | D

W.S. Darley & Co.
CHIPPEWA FALLS, WI - MELROSE PARK, IL

LDM PTO, OPP ENG ROTATION
W/CARB GEARS, C.S.

DATE 06-Jul-05

SCALE 1/2

DLC0205

Rev. 3
Date: 02/15/06
Rev Date: 10/09/07
1200538.doc

Prepared By: EAP
Revised By: EAP
Approved By: TED

NO.	DESCRIPTION	PART NO.	QTY.
1	GEAR - PINION, N, 8DP, 20 PA	-	1
2	GEAR - DRIVE, PSP, 8DP, 20DEG PA	-	1
3	KEY - SQ., 0.38 X 2.50	-	1
4	HOUSING - BEARING, N, OUTBOARD	-	1
5	SPACER - 1.57 X 2.00 X 0.71	-	1
6	BEARING-BALL	-	1
8	SHAFT - IDLER GEAR, N	-	1
9	BEARING CAP, IDLER	-	1
10	KEY - SQ., 0.25 X 2.50 GR2	-	1
11	SPACER - 1.75 X 2.0 X 1.43	-	1
12	SHAFT - OUTPUT, PTO	-	1
13	BEARING - 22206 PC-3	-	2
14	O-RING - 3.50 x 3.69 X 0.09	-	2
15	O-RING - 0.88 x 1.12 x 0.12	-	1
16	SHIFT BAR - PSM	-	1
17	RING - RETAINER, 5160-87	-	1
18	GEAR - DRIVE, N, 8DP, 20 DEGREE PA	-	1
20	SHAFT - TRANSMISSION	-	1
21	SPACER - 2.56 x 2.88 x 1.58	-	1
22	BEARING-BALL, 113KSFF	-	2
25	BRACKET - BEARING, FRONT, N	-	1
26	BEARING-BALL, 213SF	-	1
27	O-RING - 5.00 x 5.25 x 0.12	-	2
28	PLUG - PIPE, 0.375, MAG SQ HD	-	1
35	GEAR - SLIDING CLUTCH, N	-	1
36	BEARING-BALL, 305SFF	-	1
37	BEARING-BALL, 114KSFCO	-	1
39	OIL SEAL - 2.000 ID X 2.879 OD	-	1
40	OIL SEAL - 2.750 ID X 3.505 OD	-	2
41	BEARING-BALL, 213SFF	-	1
42	REAR BEARING CAP, N	-	1
43	WASHER - 2.56 x 3.00 x .09 STL	-	1
44	END YOKE	-	2
46	LOCKNUT	-	2
47	NUT - FLANGE, 7/8-14	-	1
48	SHAFT - TRANSMISSION	-	1
49	OIL SEAL - 2.938 ID X 3.756 OD	-	2
50	WIRE - SAFETY	-	1
51	BRACKET - BEARING, REAR NO BRK	-	1
52	LOCK BOLT - SHIFT BAR	-	1
53	SHIFT YOKE	-	1
54	PLUG - TACH, .88-18UNS	-	1
55	NUT - CABLE DRIVE, KDM, 0.104	-	1
56	OIL SEAL - 0.375 ID X 0.688 OD	-	1
57	CAP - BEARING, IDLER, TACH	-	1
59	COMP FLANGE - 1410	-	1
61	BEARING-BALL, 309SFF	-	1
65	VENT	-	1
66	GEARCASE - LDMH/LDMC, PUMP FWD	-	1
67	CAP - BEARING, PUMP SHAFT	-	1
101	HHCS - .375-16 x 0.88, GR5	-	8
102	WASHER - LOCK, 0.375 ID	-	24
103	HHCS - .500-13 x 1.75, GR5	-	3
104	SHCS - .375-16 x 1.00, GR8	-	1
105	SHCS - .375-16 x 1.25, GR8	-	7
106	HHCS - .375-16 x 1.25, GR5	-	4
107	HHCS - .375-16 x 1.75, GR5	-	4
108	WASHER - LOCK, 0.500 ID	-	3
109	WASHER - LOCK, HC, 0.375 ID	-	8
110	HHCS - .375-16 x 1.00, GR5	-	8
120	SPACER - 1.75 X 2.40 X 0.86	-	1
124	PIN - DOWEL, .250 X 0.62, GR8	-	2
358	O-RING - 4.50 x 4.69 x 0.09	-	1
359	FLINGER - WATER	-	2
362	PELLET - OIL WICK	-	6
363	O-RING - 20MM x 25MM x 2.5MM	-	1
365	AIR CYLINDER - 1.75 BORE	-	1
366	DIPSTICK - M22x2.5 THR'D	-	1
368	SPACER - 1.19 x 2.00 x .25	-	1
369	RING - RETAINER, N5000-393	-	1
372	TRANSMISSION COVER ASSEMBLY	-	1

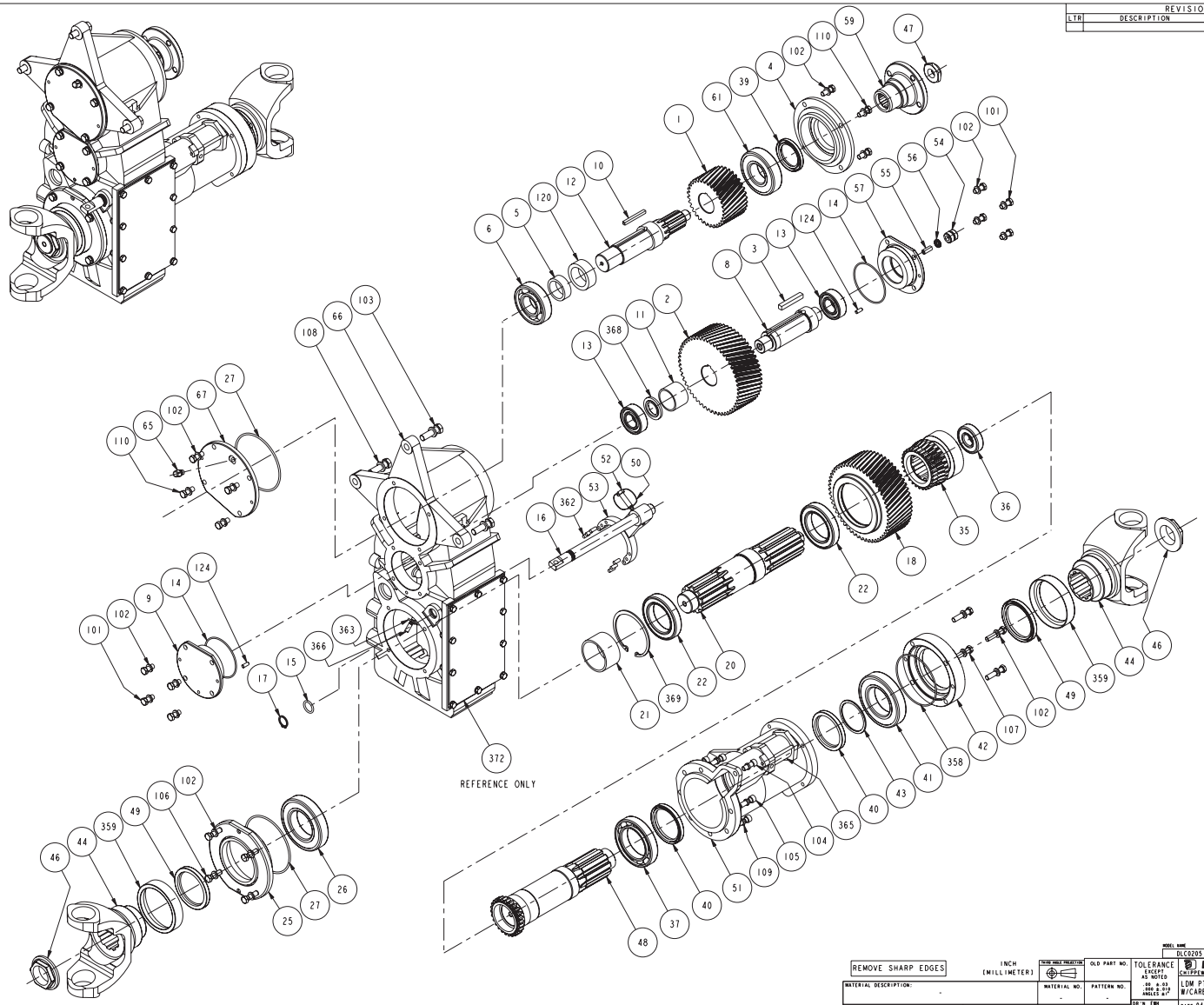

REVISIONS				
LTR	DESCRIPTION	DATE	CHG NO.	APPR'D

REMOVE SHARP EDGES

INCH (MILLIMETER)

THIRD ANGLE PROJECTION

OLD PART NO.

TOLERANCE EXCEPT AS NOTED .00 ±.03 .000 ±.010 ANGLES ±1°

MATERIAL DESCRIPTION: -

MATERIAL NO. -

PATTERN NO. -

DR'N EBH

CHKD S.R.

TRCD

THIS DESIGN IS THE PROPERTY OF W.S. DARLEY AND CO. - UNAUTHORIZED REPRODUCTION IS PROHIBITED

ALL DIMENSIONS IN INCHES UNLESS NOTED

DO NOT SCALE PRINT

MODEL NAME	MDL CREATED	SHEET	
DLC0205	1-JUL-05	2/2	D

W.S. Darley & Co.
CHIPPEWA FALLS, WI - MELROSE PARK, IL

LDM PTO, OPP ENG ROTATION W/CARB GEARS, C.S.

DATE 04-Feb-06

SCALE 1/2

DLC0205

Prepared By: EAP
Revised By: EAP
Approved By: TED

Rev. 3
Date: 02/15/06
Rev Date: 10/09/07
1200538.doc

NAME:JMB OBJECT:DKD0220_1 DATE:12-Jul-10 16:06:35

NO.	DESCRIPTION	PART NO.	QTY.
1	BRACKET - MICROSWITCH	-	1
2	BAND - BRAKE, 12 x 3	-	1
3	BEARING-BALL, 113KSFF	-	2
4	BEARING-BALL, 114KSFF	-	1
5	BEARING-BALL, 213SFF	-	2
6	BEARING-BALL, 305SFF	-	1
7	BEARING-BALL, 6306.C3	-	3
8	BEARING-BALL,208SF	-	1
9	BELLCRANK 12 x 4	-	1
10	BRACKET - BEARING, REAR, BRAKE	-	1
11	BRACKET - FRONT BEARING	-	1
12	CAP - BEARING, K 1.62:1,3.65:1	-	1
13	CAP - BEARING, O OFFSET	-	1
14	CAP - BEARING,KDM 1.6283.65:1	-	1
15	CAP - BEARING, K-LIFT BOX	-	1
16	COVER - BEARING BRACKET	-	1
17	COMP FLANGE - 1350/1410, 1.50-10	-	1
18	COVER - GEARCASE, JMP/LSM	-	1
19	DRUM - BRAKE, MODIFICATION	-	1
20	FLANGE - COMPANION, 1550	-	1
21	FLANGE - COMPANION, 1610	-	1
22	GASKET - GEARCASE COVER, KDM	-	1
23	GEAR - DRIVE, KDM, 12 DP 20PA	-	1
24	GEAR - IDLER, KDM, 12DP	-	1
25	GEAR - PINION, LS, 12DP	-	1
26	HHCS - .250-20 x 0.63, GR5	-	3
27	GEAR - PUMP CLUTCH, KDM	-	1
28	GEAR - SLIDING CLUTCH, KDM/KSM	-	1
29	GEARCASE - KS/LS MIDSHIP	-	1
30	HANGER - BRAKE, R, 2 1/2 SHAFT	-	1
31	HHCS - .313-18 x 0.75, GR5	-	16
32	HHCS - .313-18 x 1.00, GR5	-	8
33	HHCS - .313-18 x 3.25, F-911	-	6
34	MICROSWITCH - OMRON	-	1
35	HHCS - .375-16 x 1.25, GR5	-	4
36	WASHER - INT. TOOTH, 0.500 ID	-	1
37	KEY - SQ., 0.19 x 2.62	-	1
38	KEY - WOODRUFF, 606	-	1
39	LOCK BOLT - SHIFT BAR	-	1
40	LOCKNUT	-	2
41	NUT - HEX, .375-16, GR2	-	4
42	NUT - CABLE DRIVE, KDM, 0.104	-	1
43	NUT - FLANGE, 7/8-14	-	1
44	NUT - HEX, NO.6-32, BR	-	2
45	NUT - JAM, .625-18, GR2	-	4
46	O-RING - 0.88 x 1.12 x 0.12	-	1
48	O-RING - 5.00 x 5.25 x 0.12	-	1
49	OIL SEAL - 2.750 ID X 3.505 OD	-	2
50	O-RING - 3.50 x 3.69 X 0.09	-	4
51	OIL SEAL - 2.125 ID X 3.000 OD	-	1
52	PIN - BELL CRANK	-	1
53	PIN - CLEVIS, .5"	-	2
54	OIL SEAL - 2.938 ID X 3.756 OD	-	2
55	PLUG - PIPE, 0.125, ZN SOC HD	-	2
56	PIN - COTTER, .094 x .750, SST	-	3
57	PLUG - PIPE, 0.375, MAG SQ HD	-	2
58	RETAINER - BEARING, K	-	1
59	PLUG - TACH, .88-18UNS	-	1
60	RING - RETAINER, 5160-87	-	1
61	SCREW - .625-18 x 1.5	-	4
62	SHAFT - IDLER GEAR, K	-	1
63	SHAFT - OUTPUT, K-LIFT BOX	-	1
64	SHAFT - TRANSMISSION	-	1
65	SHAFT - TRANSMISSION, KSM750	-	1
66	SHCS - .375-16 x 1.00, GR8	-	1
67	SHCS - .375-16 x 1.25, GR8	-	7
69	SHIFT BAR - KDM	-	1
70	SHIFT YOKE	-	1
71	SPACER - 1.19 x 1.50 x 0.13	-	2
72	SPACER - 2.56 x 2.88 x 0.19	-	1
73	SSS - 3/8-16 x .50, GR5	-	4
74	VENT - GEARCASE	-	1
75	WASHER - 2.56 x 3.00 x .09 STL	-	1
76	RHMS - NO.6-32 X1.00, BR	-	2
77	WASHER - LOCK, 0.313 ID	-	24
78	WASHER - LOCK, 0.375 ID	-	8
79	WASHER - LOCK, 0.625 ID	-	4
80	WASHER - LOCK, HC, 0.375 ID	-	8
81	STUD - 0.375-16 X 1.750, GR5	-	4
82	WASHER - SPECIAL, .75 ID STL	-	1
83	WIRE - SAFETY	-	1
84	YOKE - .050-20	-	1
85	YOKE - ADJUSTABLE 86 .50-20	-	1
86	NUT - JAM, .500-20, GR2	-	1
87	O-RING - 4.75 x 4.94 x 0.09	-	1
88	OIL SEAL - 0.375 ID X 0.688 OD	-	1
89	GREASE ZERK - .25-28	-	1
90	WASHER - LOCK, 0.250 ID	-	2
91	WASHER - LOCK, NO.6 ID, SST	-	2

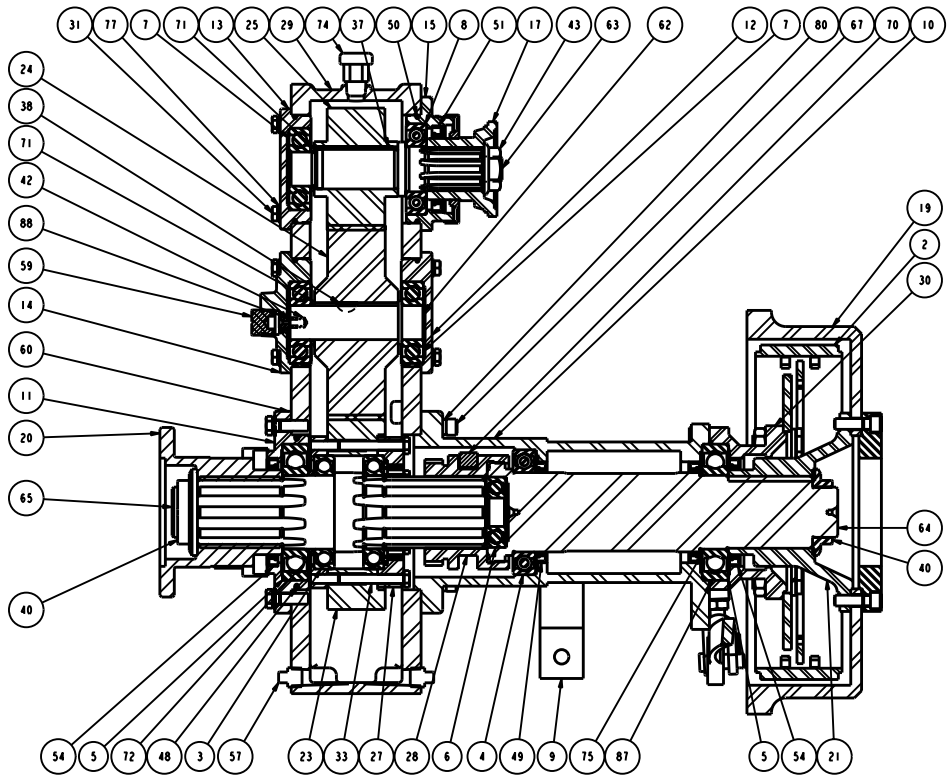

SECTION A-A
SCALE 1/2

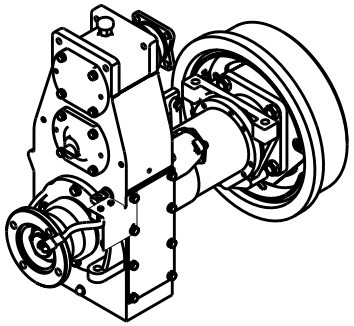

SCALE 1/4

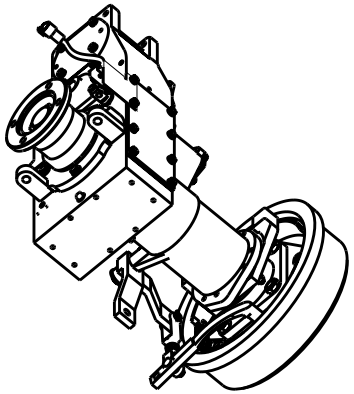

REVISIONS

LTR	DESCRIPTION	DATE	CHG NO.	APPR'D
A	ADDED (4) EA 3606205 AND 5403002	8JUL10	6556	JMB

REMOVE SHARP EDGES

INCH [MILLIMETER]

OLD PART NO.

TOLERANCE EXCEPT AS NOTED .00 ±0.03 .000 ±0.010 ANGLES ±1°

MATERIAL DESCRIPTION: -

MATERIAL NO. -

PATTERN NO. -

THIS DESIGN IS THE PROPERTY OF W.S. DARLEY AND CO. UNAUTHORIZED REPRODUCTION IS PROHIBITED

ALL DIMENSIONS IN INCHES UNLESS NOTED

DO NOT SCALE PRINT

DR'N B.R.
CHK'D B.R.
APP'D B.R.
TOL'D

MODEL NAME: TP00706
NO. CREATED: 30-Jan-08
SHEET: 1/3
D

W.S. Darley & Co.
ITASCA, IL CALEDONIA, ZALLA, MI

TRANS - KDM, SS PTO, ENG
2.5 LOCKON W/BRAKE ASSY

DATE 30-Jan-08
SCALE 1/2

DKD0220

NAME:JMB OBJECT:DKD0220_2 DATE:12-Jul-10 16:06:51

NO.	DESCRIPTION	-	QTY.
1	BRACKET - MICROSWITCH	-	1
2	BAND - BRAKE, 12 x 3	-	1
3	BEARING-BALL, 113MSFF	-	2
4	BEARING-BALL, 114MSFF	-	1
5	BEARING-BALL, 2135FF	-	2
6	BEARING-BALL, 305SFF	-	1
7	BEARING-BALL, 6306.C3	-	3
8	BEARING-BALL,208SF	-	1
9	BELLCRANK 12 x 4	-	1
10	BRACKET - BEARING, REAR, BRAKE	-	1
11	BRACKET - FRONT BEARING	-	1
12	CAP - BEARING, K 1.62:1,3.65:1	-	1
13	CAP - BEARING, 0 OFFSET	-	1
14	CAP - BEARING,KDM 1.6283.65:1	-	1
15	CAP - BEARING, K-LIFT BOX	-	1
16	COVER - BEARING BRACKET	-	1
17	COMP FLANGE - 1350/1410, 1.50-10	-	1
18	COVER - GEARCASE, JMP/LSM	-	1
19	DRUM - BRAKE, MODIFICATION	-	1
20	FLANGE - COMPANION, 1550	-	1
21	FLANGE - COMPANION, 1610	-	1
22	GASKET - GEARCASE COVER, KDM	-	1
23	GEAR - DRIVE, KDM, 12 DP 20PA	-	1
24	GEAR - IDLER, KDM, 12DP	-	1
25	GEAR - PINION, LS, 12DP	-	1
26	HHCS - .250-20 x 0.63, GR5	-	3
27	GEAR - PUMP CLUTCH, KDM	-	1
28	GEAR - SLIDING CLUTCH, KDM/KSM	-	1
29	GEARCASE - KS/LS MIDSHIP	-	1
30	HANGER - BRAKE, N, 2 1/2 SHAFT	-	1
31	HHCS - .313-18 x 0.75, GR5	-	16
32	HHCS - .313-18 x 1.00, GR5	-	8
33	HHCS - .313-18 x 3.25, F-911	-	6
34	MICROSWITCH - OMRON	-	1
35	HHCS - .375-16 x 1.25, GR5	-	4
36	WASHER - INT. TOOTH, 0.500 ID	-	1
37	KEY - SQ., 0.19 x 2.62	-	1
38	KEY - WOODRUFF, 606	-	1
39	LOCK BOLT - SHIFT BAR	-	1
40	LOCKNUT	-	2
41	NUT - HEX, .375-16, GR2	-	4
42	NUT - CABLE DRIVE, KDM, 0.104	-	1
43	NUT - FLANGE, 7/8-14	-	1
44	NUT - HEX, NO.6-32, BR	-	2
45	NUT - JAM, .625-18, GR2	-	4
46	O-RING - 0.88 x 1.12 x 0.12	-	1
48	O-RING - 5.00 x 5.25 x 0.12	-	1
49	OIL SEAL - 2.750 ID X 3.505 OD	-	2
50	O-RING - 3.50 x 3.69 X 0.09	-	4
51	OIL SEAL - 2.125 ID X 3.000 OD	-	1
52	PIN - BELL CRANK	-	1
53	PIN - CLEVIS, .5"	-	2
54	OIL SEAL - 2.938 ID X 3.756 OD	-	2
55	PLUG - PIPE, 0.125, ZN SOC HD	-	2
56	PIN - COTTER, .094 x .750, SST	-	3
58	RETAINER - BEARING, K	-	1
59	PLUG - TACH, .88-18UNS	-	1
60	RING - RETAINER, 5160-87	-	1
61	PLUG - PIPE, 0.375, MAG SO HD	-	2
62	SHAFT - IDLER GEAR, K	-	1
63	SHAFT - OUTPUT, K-LIFT BOX	-	1
64	SHAFT - TRANSMISSION	-	1
65	SHAFT - TRANSMISSION, KSM750	-	1
66	SHCS - .375-16 x 1.00, GR8	-	1
67	SCREW - .625-18 x 1.5	-	4
69	SHIFT BAR - KDM	-	1
70	SHIFT YOKE	-	1
71	SPACER - 1.19 x 1.50 x 0.13	-	2
72	SPACER - 2.56 x 2.88 x 0.19	-	1
73	SSS - 3/8-16 x .50, GR5	-	4
74	VENT - GEARCASE	-	1
75	WASHER - 2.56 x 3.00 x .09 STL	-	1
76	RHMS - NO.6-32 X1.00, BR	-	2
77	WASHER - LOCK, 0.313 ID	-	24
78	WASHER - LOCK, 0.375 ID	-	8
79	WASHER - LOCK, 0.625 ID	-	4
80	WASHER - LOCK, HC, 0.375 ID	-	8
81	STUD - 0.375-16 X 1.750, GR5	-	4
82	WASHER - SPECIAL, .75 ID STL	-	1
83	WIRE - SAFETY	-	1
84	YOKE - .050-20	-	1
85	YOKE - ADJUSTABLE #6 .50-20	-	1
86	NUT - JAM, .500-20, GR2	-	1
87	O-RING - 4.75 x 4.94 x 0.09	-	1
88	OIL SEAL - 0.375 ID X 0.688 OD	-	1
89	GREASE ZERK - .25-28	-	1
90	WASHER - LOCK, 0.250 ID	-	2
91	WASHER - LOCK, NO.6 ID, SST	-	2
92	SHCS - .375-16 x 1.25, GR8	-	7

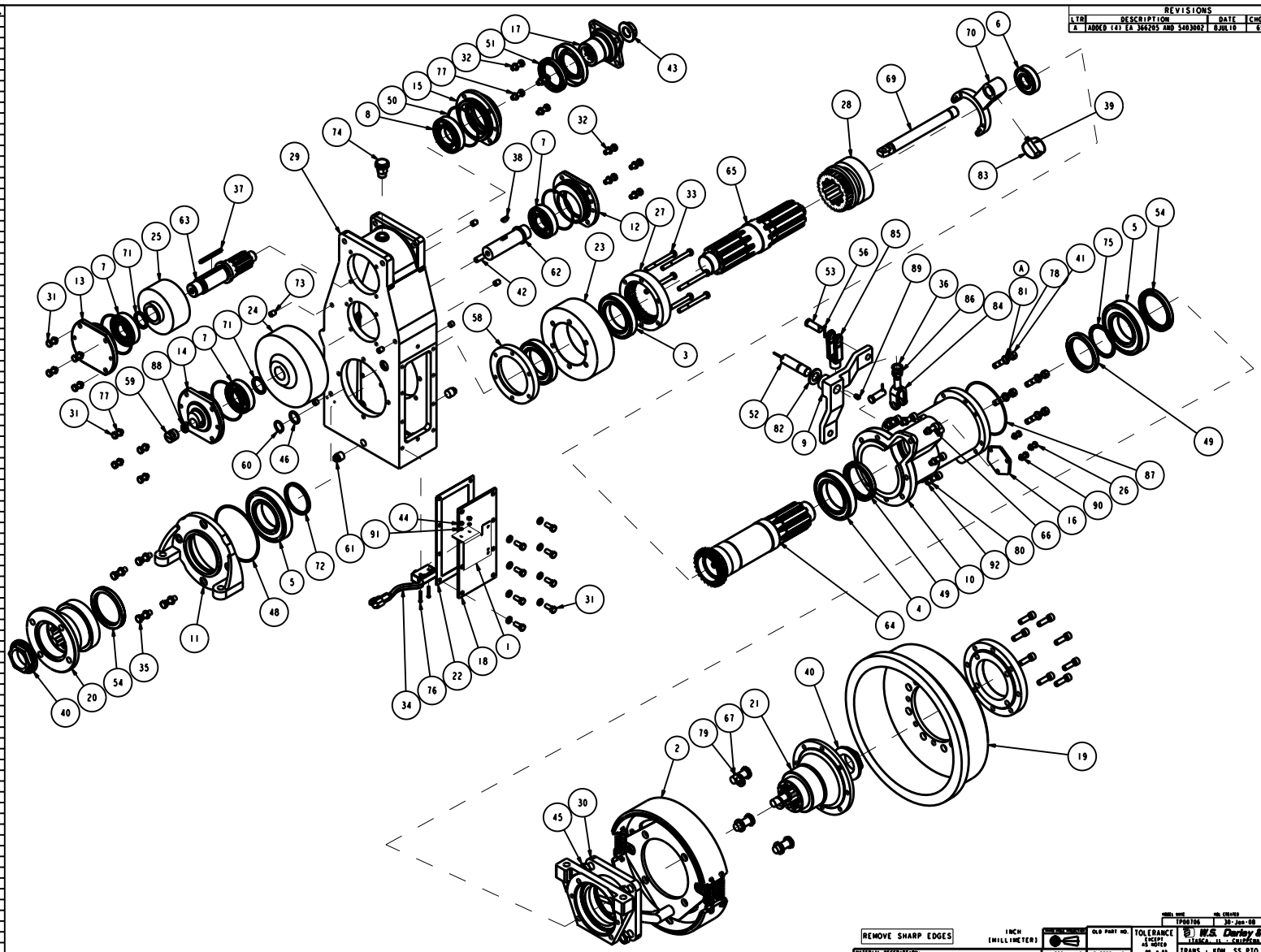

REVISIONS

LTR	DESCRIPTION	DATE	CHG NO.	APPR'D
A	ADDED (4) EA 364205 AND 5403002	8JUL10	6556	JMB

REMOVE SHARP EDGES

INCH [MILLIMETER]

MATERIAL DESCRIPTION:

THIS DESIGN IS THE PROPERTY OF W.S. DARLEY AND CO. UNAUTHORIZED REPRODUCTION IS PROHIBITED

ALL DIMENSIONS IN INCHES UNLESS NOTED

OLD PART NO.

MATERIAL NO.

PATTERN NO.

DO NOT SCALE PRINT

TOLERANCE EXCEPT AS NOTED .00 ± 0.03 .000 ± 0.010 ANGLES ±1°

DR'N B.B.
CHK'D B.B.
APP'D B.B.
TECH

MODEL NAME: TP00706
NO. CREATED: 30-Jan-08
SHEET: 273 D

W.S. Darley & Co.
ITASCA, IL CALEDONIA, ZALLA, MI

TRANS - KDM, SS PTO, ENG
2.5 LOCKON W/BRAKE ASSY

DATE 30-Jan-08
SCALE 1/4

DKD0220

NAME:JMB OBJECT:DKD0220_3 DATE:12-Jul-10 16:07:03

REVISIONS				
LTR	DESCRIPTION	DATE	CHG NO.	APPR'D
A	ADDED (4) EA 3606205 AND 5403002	8JUL10	6556	JMB

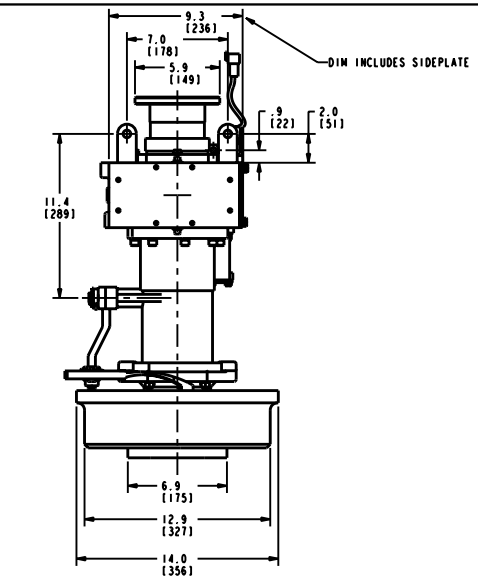

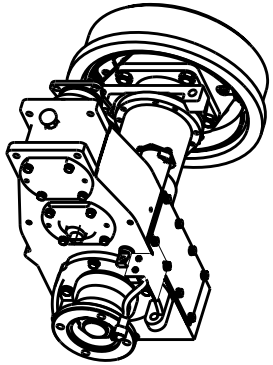

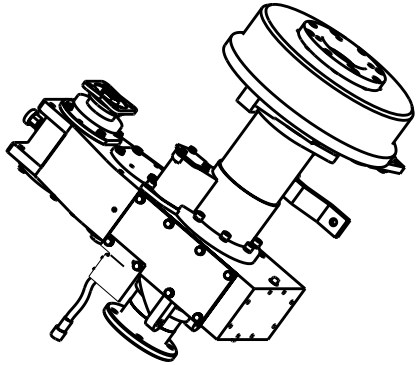

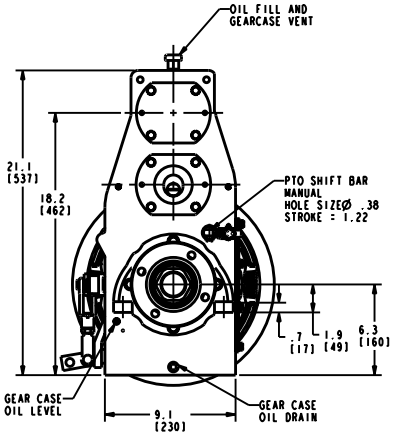

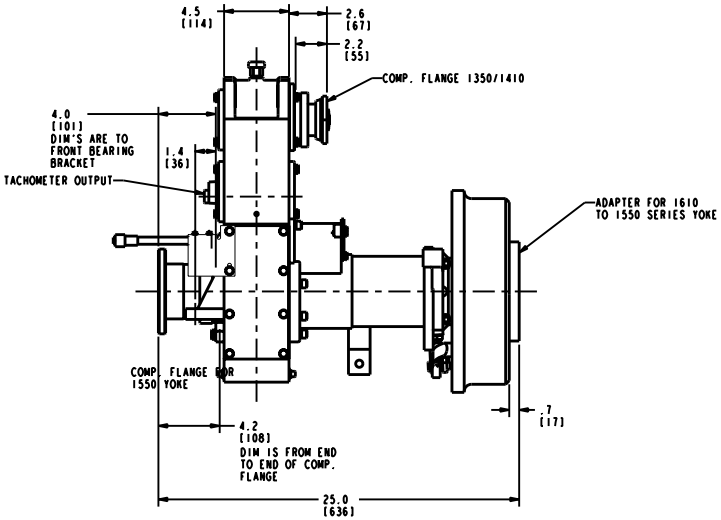

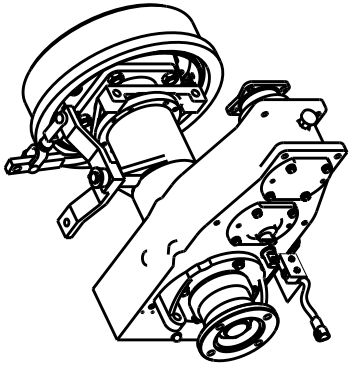

NOTE:
PTO OUTPUT ENGINE ROTATION ONLY

AVAILABLE GEAR RATIOS: 1.62:1 2.28:1
1.75:1 2.53:1
1.90:1 2.83:1
2.08:1 3.19:1

PTO OUTPUT TORQUE UP TO 400 FT-LB
PTO OUTPUT HORSEPOWER UP TO 200 HP
PTO OUTPUT SPEED UP TO 4700 RPM

MAXIMUM DRIVELINE THROUGH TORQUE 19,300 FT-LB

CONTACT W.S. DARLEY ENGINEERING DEPARTMENT
FOR APPLICATION ASSISTANCE

MODEL NAME	NO. CREATED	SHEET	
TP00706	30-Jan-08	3/3	D

REMOVE SHARP EDGES

INCH
[MILLIMETER]

THIRD ANGLE PROJECTION

OLD PART NO.

TOLERANCE
EXCEPT
AS NOTED
.00 ±0.03
.000 ±0.010
ANGLES ±1°

MATERIAL DESCRIPTION:

MATERIAL NO.

PATTERN NO.

THIS DESIGN IS THE PROPERTY OF W.S. DARLEY AND CO. UNAUTHORIZED REPRODUCTION IS PROHIBITED

ALL DIMENSIONS IN INCHES UNLESS NOTED

DO NOT SCALE PRINT

DR'N
CHKD
TOL'D

W.S. Darley & Co.
ITASCA, IL. CALEDONIA, ZAILS, WI

TRANS - HDW, SS PTO, ENG
2.5 LOCKON W/BRAKE ASSY

DATE 30-Jan-08

SCALE 1/4

DKD0220

PUMP SHIFTING PROCEDURE

For trucks equipped with manual transmissions, the following shifting procedure should be followed for pump operation:

1. Set parking brake.
2. Disengage truck clutch to stop shaft rotation.
3. Move pump shift lever to PUMP position.
4. Move truck transmission shift lever to neutral position.
5. Engage truck clutch.
6. Prime the pump (see priming instructions).
7. Disengage the truck clutch.
8. Move truck transmission shift lever to direct drive position and lock in place with safety latch.
9. Engage truck clutch to begin pumping.

If the power pump shift is provided, the procedure is identical except green indicator light (if provided) will come on at step #3 to show pump gear has been engaged.

To return to road operation:

1. Disengage truck clutch to stop shaft rotation.
2. Move truck transmission shift lever to neutral position.
3. Move pump shift lever to ROAD position.

When the truck is equipped with an automatic transmission, a danger exists that if the operator forgets to move the pump shift lever to PUMP position, and at the same time place transmission selector lever in high gear before leaving cab, the engine will continue to run due to converter slip. Upon advancing the vernier throttle at the pump operators panel, the engine could overcome the parking brake and accidentally move the truck. To prevent this possibility, the following shifting procedure should be followed for pump operation:

1. Set parking brake.
2. Place automatic transmission shift selector in neutral.
3. Move pump shift lever to PUMP position. “Pump Engaged” light in cab should now come on.
4. Prime the pump (see Priming Instructions).
5. Move automatic transmission shift selector to direct drive position (See Automatic Transmission Instructions).
6. Lock automatic transmission shift selector in direct drive position with safety latch provided.
7. Check that the parking brake is fully engaged.
8. Depress foot accelerator and observe that speedometer registers MPH. If pump is not engaged, speedometer will not indicate MPH.
9. Listen for pump shift and sound of pump gears turning.
10. At pump operators position, observe that the green indicator light above vernier throttle control is on. **Do not** operate throttle unless light is on.
11. Observe discharge pressure gage on panel while advancing vernier throttle, to ensure that it is indicating pressure. If Pump is not engaged, no pressure will show.
12. Remember, the vernier throttle has a quick release emergency center button. Push it all the way in immediately, should the truck move.

To return to ROAD OPERATION:

1. Place the truck transmission selector lever in reverse position to stop forward rotation of transmission shaft.
2. Move transmission selector to neutral, and at the same time, move the pump shift lever from PUMP to the ROAD position.

OPERATION OF PUMP SHIFT WITH AUTOMATIC TRANSMISSION

The pump gear shift consists of a sliding clutch gear splined to the transmission shaft which can be moved forward to engage the pump clutch gear, or to the rear to engage the rear drive shaft connected to the truck drive axle.

The sliding clutch gear is moved either by direct mechanical linkage from a notched quadrant shift lever, or by an air power cylinder controlled by a selector valve. The shift lever or selector valve must be moved all the way and locked for either ROAD position to drive truck or PUMP position to pump.

MANUAL PUMP GEAR SHIFT PROCEDURE

With trucking parking brake set, the truck transmission shift selector must be in neutral position to stop rotation of truck transmission output shaft before shifting into either ROAD or PUMP gear to prevent clashing and damage to gear teeth. With a manual pump gear shift control, a butt tooth position of gears may be encountered preventing engagement and "Pump Engaged" light from coming on. If this occurs, move transmission shift selector momentarily into any forward gear position with engine idling, then return to neutral. Wait approximately 5 seconds until shaft stops turning. Moving the pump shift lever to PUMP position again should complete the pump shift and turn on the "Pump Engaged" light. Repeat this procedure if a butt tooth condition is again encountered. Pump priming should be completed before shift to PUMP position.

AIR POWER PUMP GEAR SHIFT PROCEDURE

With the air power pump gear shift control a butt tooth condition may also occur preventing engagement and "Pump Engaged" light from coming on. This can be easily overcome by momentarily placing truck transmission in any forward gear position with engine idling after the pump shift valve is placed in the PUMP position. Shaft rotation will complete the shift and turn on green "Pump Engaged" light. Transmission shift should be returned to neutral position after "Pump Engaged" light comes on for the pump priming period.

The above procedure insures that the pump shift is completed and the "Pump Engaged" light comes on. An alternate procedure in case of a butt tooth condition is simply to wait until the transmission is placed into pump drive gear position, when shaft rotation will immediately permit pump gears to mesh into full engagement.

The pump is usually operated with truck transmission in direct (high) gear such as D or 2-5. Overdrive may be required with very low speed engines.

When the truck is equipped with an automatic transmission, a danger exists that should the operator forget to move the pump shift valve to PUMP position, and at the same time place transmission selector in high gear before leaving cab, the engine will continue to run due to converter slip. If the operator advances the vernier throttle at the pump operators panel, the engine could overcome the parking brake and cause the truck to move. To prevent this possibility, the following shifting procedure should be followed for PUMP position:

1. Read and fully understand pump Operators Manual before proceeding.

2. Set parking brake and idle engine.

3. Place automatic transmission shift selector in neutral.

4. Move pump shift lever or valve to PUMP position. "Pump Engaged" green light in cab should now come on. If not, momentarily place truck transmission shift selector in a forward gear to complete pump shift, then return to neutral position. Green light will now be on.

5. Prime pump.

6. Move automatic transmission shift selector to direct drive position. “OK to Pump” green light in cab should now be on.

7. Lock automatic transmission shift selector in direct drive.

8. Listen for sound of pump gears turning. Speedometer will show MPH unless connected to the wheel.

9. At pump operators position, observe the green indicator warning light near vernier throttle control. WARNING: DO NOT OPEN THROTTLE UNLESS LIGHT IS ON.

10. Advance throttle to provide a minimum of 900 rpm idle speed. Observe discharge pressure gage on panel while advancing vernier throttle to make sure it is indicating pressure. If pump is not engaged or the pump is not primed, no pressure will show.

The vernier throttle has a quick release emergency red center button. Push it all the way in to return the engine to idle if necessary in an emergency situation

To return to ROAD operation:

1. Throttle engine back to idle.

2. Place the truck transmission selector lever in neutral position. Wait approximately 5 seconds until drive shaft stops rotating.

3. Move pump shift lever or valve from PUMP to ROAD position. “Pump Engaged” green indicator light should be off. A butt tooth condition may require momentary engagement of transmission to complete the shift.

OPERATION OF PUMP SHIFT WITH MANUAL TRANSMISSION

The pump gear shift consists of a sliding clutch gear, splined to the transmission shaft which can be moved forward to engage the pump clutch gear, or to the rear to engage the rear drive shaft connected to the truck drive axle. A neutral position is half way between.

The sliding clutch gear is moved either by direct mechanical linkage from a notched quadrant shift lever, or by a vacuum or air power cylinder controlled by a selector switch. The shift lever must be moved all the way and locked for either ROAD position to drive truck or PUMP position to power pump.

The truck clutch must always be disengaged to stop rotation of truck transmission output shaft before shifting into either ROAD or PUMP gear to prevent clashing and damage to gear teeth. With the manual shift lever, a butt tooth position of gears may be encountered occasionally preventing engagement. If this occurs, move pump shift lever to neutral (half way) position, engage truck clutch momentarily, then disengage truck clutch and try pump shift again.

The pump is always operated with truck transmission in direct (high) gear, such as 4th on a 4 speed or 5th on 5 speed transmission.

The following shifting procedure should be followed for PUMP operation:

1. Set parking brake.
2. Disengage truck clutch.
3. Move pump shift lever (valve) to PUMP position. “PUMP ENGAGED” green light in cab should now come on.
4. Move truck transmission shift lever to neutral position.
5. Engage truck clutch.
6. Prime pump (See Priming Instructions).
7. Disengage truck clutch.
8. Move truck transmission shift lever to direct drive position and lock in place with safety latch provided.
9. Slowly engage truck clutch to begin pumping.

TO RETURN TO ROAD OPERATION

1. Disengage truck clutch to stop shaft rotation. Allow 10 seconds for shaft to stop rotating.
2. Move truck transmission shift lever to neutral position.
3. Move pump shift lever (valve) to ROAD position.

CAUTION

Follow the procedures step by step as indicated.

IF FURTHER INFORMATION IS NEEDED, CALL W.S. DARLEY & CO. AT CHIPPEWA FALLS, WI. AT 800-634-7812 or 715-726-2650

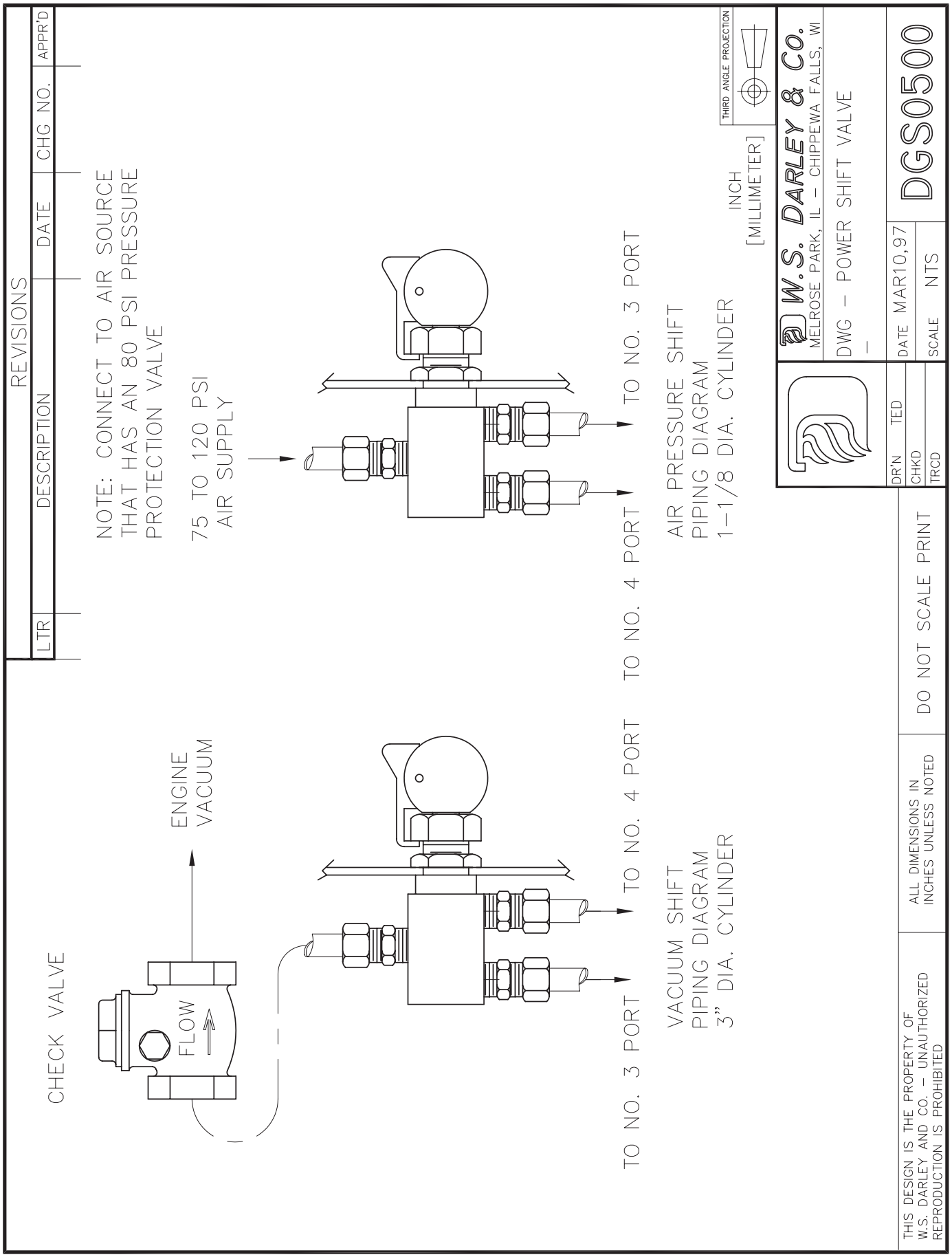
REVISIONS
LTR
DESCRIPTION
DATE
CHG NO.
APPR'D
NOTE: CONNECT TO AIR SOURCE THAT HAS AN 80 PSI PRESSURE PROTECTION VALVE
75 TO 120 PSI AIR SUPPLY
TO NO. 3 PORT
TO NO. 4 PORT
AIR PRESSURE SHIFT PIPING DIAGRAM 1-1/8 DIA. CYLINDER
INCH [MILLIMETER]
THIRD ANGLE PROJECTION
W.S. DARLEY & Co.
MELROSE PARK, IL - CHIPPEWA FALLS, WI
DWG - POWER SHIFT VALVE
DGS0500
DATE MAR10,97
SCALE NTS
DR'N TED
CHK'D
TRC'D
ENGINE VACUUM
CHECK VALVE
FLOW
TO NO. 4 PORT
TO NO. 3 PORT
VACUUM SHIFT PIPING DIAGRAM 3" DIA. CYLINDER
DO NOT SCALE PRINT
ALL DIMENSIONS IN INCHES UNLESS NOTED
THIS DESIGN IS THE PROPERTY OF W.S. DARLEY AND CO. - UNAUTHORIZED REPRODUCTION IS PROHIBITED

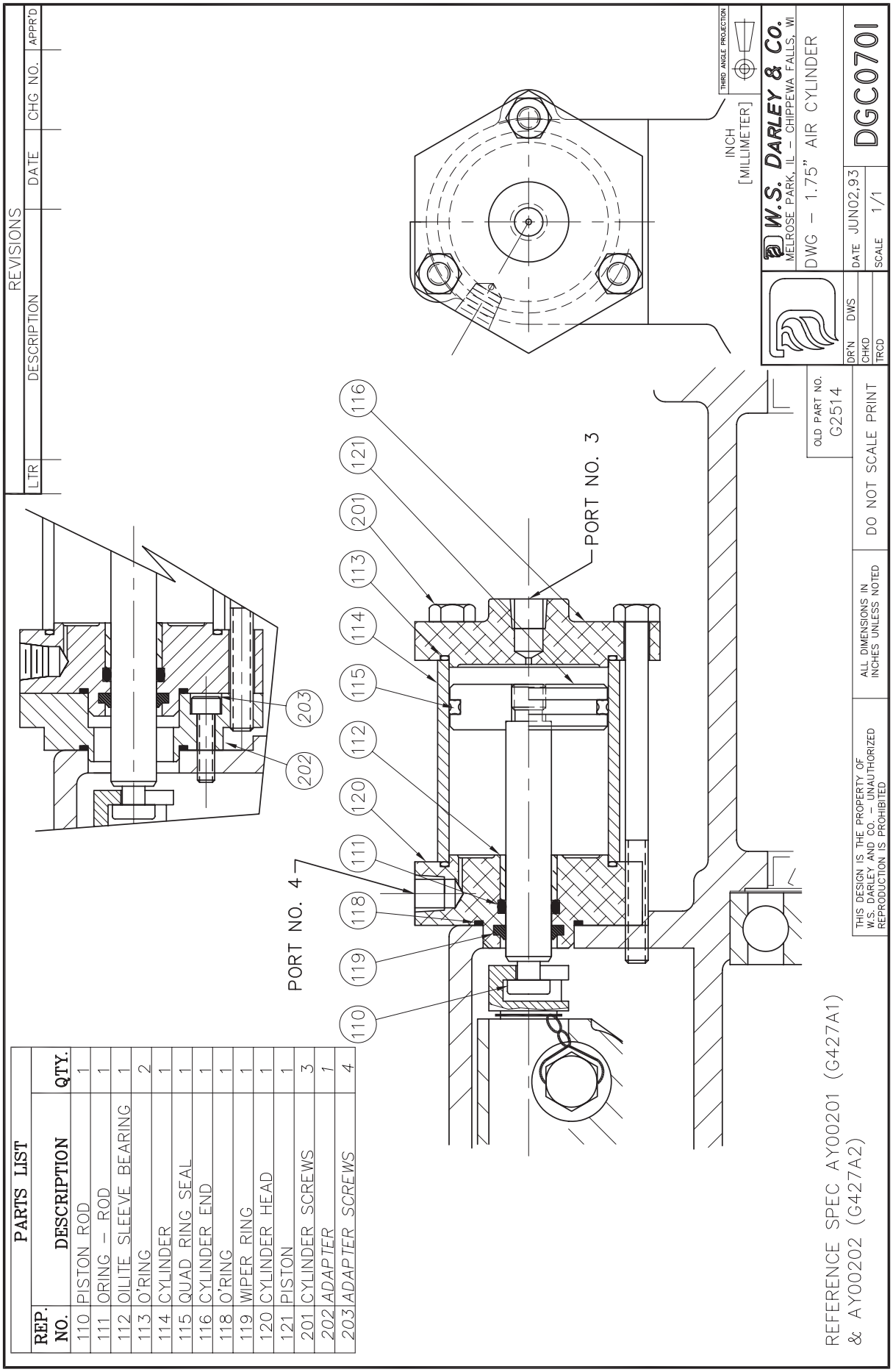

PARTS LIST

REP. NO.	DESCRIPTION	QTY.
110	PISTON ROD	1
111	ORING - ROD	1
112	OILITE SLEEVE BEARING	1
113	O'RING	2
114	CYLINDER	1
115	QUAD RING SEAL	1
116	CYLINDER END	1
118	O'RING	1
119	WIPER RING	1
120	CYLINDER HEAD	1
121	PISTON	1
201	CYLINDER SCREWS	3
202	ADAPTER	1
203	ADAPTER SCREWS	4

WARNING: DO NOT USE THIS PUMP FOR HOSE TESTING

OPERATING THE ENGINE

After the pump has been primed, the engine speed should be increased gradually -- never jerk throttle wide open. Likewise, the engine speed should be decreased gradually when shutting down.

Watch the pump pressure gage and open throttle only enough to give the desired pressure. The pressure may rise high enough to burst the discharge hose, when using small nozzles, if the engine is given full throttle (except pumps equipped with pressure regulators set for desired pressure).

Never run engine at high speeds except when pump is primed and ready to discharge water.

COOLING THE ENGINE

NFPA 1901 requires that a supplementary heat exchanger cooling system be provided. On most models, this heat exchanger is an integral part of the pump, and the installation of two hoses from the engine cooling system to the pump is all that is required.

On some models an external heat exchanger must be used. In that case two hoses from the engine cooling system and two lines from the pump will run to the heat exchanger.

The cooling line should not be opened until pressure develops in the pump, and pump should never be operated under heavy loads prolonged without an adequate supply of cooling water flowing.

Coolant temperatures should never be allowed to exceed 200° F while pumping and 180° F is usually taken as a safe operating temperature.

Always shut off cooling line when through pumping.

SUCTION STRAINERS

A large suction strainer, which will prevent the passage of a body larger than the pump impeller ports, must always be used on the free end of the suction line when pumping from draft.

The small hydrant strainer must always be inserted in the suction manifold of pump, when pumping from hydrants and at all other times except when maximum capacity is required from draft.

Failure to use a strainer at all times when pumping will cause serious trouble by clogging the pump because, even in water mains, foreign matter is invariably present, and will be drawn into pump by the high velocity of the water entering.

SUCTION LINE

The suction line of a fire pump can be the source of more operating difficulties than all the rest of the pump when working with a suction lift. Faults in the suction line which cause trouble in operation are as follows:

AIR LEAKS -- A small amount of air, expanding in the vacuum of the suction line, displaces a considerable volume of water which subtracts from the capacity that the pump is able to deliver, makes the priming difficult or causes pump to lose its prime. Therefore, it is absolutely essential to keep the suction line and the suction side of pump casing air tight at all time when drafting water.

Air leakage into pump while operating is usually indicated by a rattling sound in pump casing, miniature explosions in stream issuing from the nozzle, or by losing of prime when operating at very low capacities.

The usual cause of leaky suction lines is carelessness in handling of suction hose. Bruising of hose threads by bumping against hard surfaces or sand in the coupling often prevents tightening of the joints up against the gaskets. The hose gaskets are often defective and are sometimes lost without being noticed by the operator.

INSUFFICIENT SUBMERGENCE -- The free end of suction hose must be submerged to a sufficient depth to prevent the entrance of air that may be sucked down from the surface of the water to a considerable depth when operating at large capacities.

Entrance of air into suction lines in this manner is indicated by a small whirlpool, or vortex, on the surface of the water over the end of the hose.

A minimum submergence of 4 times the hose diameter to the upper holes in suction strainer is recommended where full capacity of pump is required. Where sufficient submergence is not possible, a board or sheet of metal laid over end of suction line will keep air from entering.

SUCTION LINE ENTRANCE TOO CLOSE TO BOTTOM -- If the end of suction line is laid on the bottom of the source of supply, a part of the suction opening will be shut off; and if the bottom is soft the hose will suck itself down into the earth, closing more of the opening and loosening sand and mud to be carried into the pump.

The suction entrance should be suspended a foot or more above the bottom, or if this is not possible, it should be laid on a board or piece of sheet metal. A rope tied to the suction strainer is a convenient means of holding it off the bottom.

OBSTRUCTION OF SUCTION STRAINER BY FOREIGN MATTER -- The high velocity of water entering the suction line will carry loose foreign bodies in against the strainer from a considerable distance. Therefore, all weeds and refuse should be removed from close proximity of the suction entrance.

SUCTION LINE TOO SMALL OR TOO LONG -- The flow of water into the pump is opposed by the frictional resistance in the suction line. This friction loss must be added to the height of the pump above the water (static lift) to determine the “total lift” of the pump. When all of the vacuum in the pump (atmospheric pressure) is consumed in raising water through this total life, then the limit of capacity has been reached. This capacity can be increased only by decreasing total lift. If the static lift cannot be reduced, then the friction loss must be reduced by using a shorter or larger suction hose.

The rated capacity of the pump is guaranteed for a static lift of 10 feet, with 20 feet of recommended suction hose at sea level. To increase the capacity without reducing the static lift, or to increase lift without sacrificing capacity, requires larger suction hose.

An excessively long suction line is a handicap to any pump, for besides reducing capacity through the added friction lose, it retards priming and it produces a detrimental effect known as “cavitation”. This means a separation of the water column in the pump suction, or void spaces, produced by the inertia of the heavy mass of water in the line resisting sudden change in the velocity when the pump starts to deliver or when discharge valves are opened or closed. This phenomenon reduces capacity further, and usually sets up a vibratory motion and “water hammer” as the water surges in and out of the void spaces.

When operating with a long suction line, the driving engine should be accelerated gradually, the discharge gates opened gradually, and the capacities of the pump should be held down to within the range of smooth performance.

AIR TRAP IN SUCTION LINE -- If the suction line is laid so that part of it is higher than any other part that is nearer to the pump, as when hose is laid over a high bridge rail, an air trap is formed at the highest part of the hose from which the air cannot be sucked out by the primer. This trapped air is expanded and carried into the pump with the first rush of water causing the pump to immediately lose its prime.

If suction line cannot be laid so that it slopes all the way from pump to water, it can still be primed easily by simply allowing the primer to continue to function until all the trapped air in the hose has been carried into the pump and picked up by the primer.

TESTING FOR AIR LEAKS

Tests for leakage should be made with the suction hose attached and capped, discharge gate open, and all other openings closed tightly.

Run electric priming pump with primer shut-off valve open, until maximum vacuum is shown on the gage. The vacuum should hold for several minutes before satisfactory performance of pump can be expected.

If excessive leakage of air occurs, the source of leaks can be located by shutting off primer motor, with vacuum at its highest point, and listening for the hiss of air.

In the absence of a vacuum gage, the vacuum in pump may be judged by closing suction opening with the flat of hand or a rubber pad.

Water or air pressure may be applied to pump casing to test for air leakage if more convenient. DO NOT pressurize with air beyond 10 PSI

SOURCE OF WATER SUPPLY

Water may be drafted from a pond, lake, stream, cistern, stock tank, or well; but whatever the source, the static lift must not exceed 20 feet from the center of the pump to the surface of the water and a lift not exceeding 10 feet is recommended. The source of supply should be reasonably clear and free from foreign matter. It is recommended that all water holes, which may be needed for fire protection, be deepened if necessary and kept free from weeds and refuse. In many fire protection areas, cisterns or reservoirs are built and allowed to fill up with rain water to be used in emergencies.

PUMPING IN COLD WEATHER

The first insurance against cold weather trouble is to keep fire apparatus stored in heated quarters. All water must be eliminated from pump casing and primer line between periods of operations.

When setting up for pumping, unnecessary delays should be avoided by having thoroughly trained pump operators. Be sure that primer and booster lines are kept closed until ready for use. Having discharge lines ready so that pump may be started as soon as it have become primed. Do not stop flow of water through the pump until ready to drain and return to the station.

Engine Coolant from the engine circulated through the heater jacket in pump casing prevents all ordinary freezing troubles.

WHEN FINISHED PUMPING

Drain water out of pump casing immediately. (Drain valve is located at lowest point in pump casing, and accessible from underneath chassis.)

Don't forget to close all drain cocks after all water has been drained out. Trouble in priming will follow on the next run if this is forgotten.

Shut off cooling line to make pump ready for priming again.

If pump transmission is equipped with a transmission cooler it must be drained also. If the master drain is located below the cooler outlets it can be connected to the master drain, if not, two separate drains must be connected to the transmission cooler. **Failure to drain transmission cooler will result in water in the gearcase if water in the cooling coil freezes.**

If pump is equipped with an external heat exchanger, drain heat exchanger using gravity and vacuum drain on all trucks as follows: Close all open lines and drain cocks. Open cooler valve and open air vent at top or drain cock at bottom of heat exchanger depending on model. With the pump air-tight open primer with engine running for about a minute and then close primer. Drain pump of water which was deposited when heat exchanger and lines were being drained.

Pump not often used for fire service should be inspected and run periodically to ensure that they will be in readiness for an emergency.

PUMPING SALT WATER

The pump should be flushed out with fresh water immediately after pumping salt water to prevent excessive rusting. (Except pumps which are built of special material to resist the corrosive action of the brine.)

When measuring sea water with a Pitot Gage, capacities shown in Table No. 2 should be discounted approximately 1 1/2% to determine the correct capacity.

A centrifugal pump will show 2 1/2% higher pressure and require 2 1/2% more power when handling sea water than when handling fresh water if operated at the same speed and capacity.

TESTING OF EQUIPMENT FOR PRACTICE

It frequently happens that operators of fire apparatus, who are not thoroughly familiar with its operations, become confused under the stress of emergency and neglect some little detail that may cause trouble or delay in getting the equipment into operation. Therefore, we urge that practice tests be conducted repeatedly until operators are thoroughly trained. More than one person in the department should be a competent operator.

Practice should include pumping from low lifts, high lifts with short and long suction lines, with suction line elevated to form an air trap, and from hydrants, at large and small capacities.

It is well, also, to note the effects of air leaks in hose, insufficient submergence and restriction of suction line. (Suction line can be restricted by placing a can or other strong closure around the suction strainer).

NEVER BREAK OR RESTRICT SUCTION OR ALLOW AIR TO ENTER SUCTION LINE WHILE ENGINE IS OPERATING WITH THROTTLE OPEN. This will release the load and allow engine to run away.

Do not allow personnel to hold a large nozzle while working at high pressures for serious accidents may result if hose breaks loose.

MEASURING PUMP PERFORMANCE

Pump performance is measured by the quantity of water it can deliver per minute against a certain pressure called “Total Head” or “Net Pump Pressure”, as it is usually termed in fire pump testing.

The net pump pressure is the sum of the pump discharge pressure, as shown on the pressure gage with which the pump is regularly equipped, and the total suction lift converted to equivalent pounds per square inch. If pump is operating from a hydrant, the net pump pressure is the discharge pressure less the incoming pressure from hydrant measured at the suction entrance of pump.

Capacity of fire pump is measured in gallons per minute. The usual method of measurement is to determine the pressure of the jet of water leaving a given size of nozzle by means of a “Pitot Gage” from which the capacity is computed mathematically.

A Pitot Gage consists of a small tube adapted to a point directly into the hose nozzle from the center of the issuing stream, the other end of the tube being connected to an accurate pressure gage.

The nozzle jet drives straight into the Pitot tube and converts the velocity of the jet to pressure which is an accurate measure of velocity of the water as it leaves the nozzle. The tip of the Pitot tube should be one-half the diameter of the nozzle away from nozzle tip while taking reading. Table No. 2 gives nozzle capacities for various Pitot Gage readings.

If a Pitot gage is not available approximate pump capacities can be determined by reference to Table No.3

ACCEPTANCE TESTS

Acceptance tests require continuous tests of three hours duration: 2 hours at 100% rated capacity and 150 PSI net pump pressure; one-half hour at 70% capacity and 200 PSI; one-half hour at 50% capacity and 250 PSI; and a spurt test at 100% capacity and 165 PSI.

Table No. 1 shows recommended set-ups and gage readings for rating tests.

To adjust nozzle pressure for the correct capacity, while maintaining the correct pump pressure, it is necessary to make simultaneous adjustments of engine throttle and the discharge gate valve, partially closing the latter until just the right discharge resistance is built up.

ENGINES

An Underwriter fire pump imposes heavy loads on the engine that drives it, often absorbing all of the power the engine is capable of delivering at full throttle. Continuous pumping gives the engine no time to rest. Therefore, a new engine and pump unit must be thoroughly broken-in before it is required to deliver prolonged maximum pump performance.

We recommend a minimum break in period of 20 hours at light pumping loads, with occasional spurt tests and interruptions. Temperature and lubrication should be checked during this period.

Engine manufacturers' power ratings usually show maximum performance of a selected, factory adjusted engine, operating without fan, generator, muffler or other accessories, and corrected for "ideal" conditions, i.e. sea level barometer (29.92" of mercury) 60°F and high humidity. Therefore, the actual power delivered by an average truck mounted engine is considerably lower than the manufacturers' rating, and allowances must be made in predicting pump performance.

EFFECTS OF ATMOSPHERIC CONDITIONS ON ENGINE AND PUMP PERFORMANCE

Each one inch of drop in Barometric pressure or each 1000 feet of elevation of the pumping site reduces engine power approximately 3 1/2% for engines not equipped with a turbo charger.

Each 12° rise in temperature above 60° F of carburetor intake air reduces engine power approximately 1%.

Lowering of humidity reduces power slightly.

Each one inch drop in Barometric pressure or each 1000 feet of elevation reduces the maximum possible static lift of a pump approximately one foot.

Temperature of the water supply affects the attainable suction lift of a pump. The effect is slight at low water temperatures but becomes increasingly detrimental as the temperature rises.

A 10° rise from 70°F will subtract about 1/2 foot from the maximum attainable suction lift, while an equal rise from 100°F will reduce the lift at least 1 1/2 feet.

Temperature is an important consideration when pumping from a test pit where the water is heated by recirculation.

IF FURTHER INFORMATION IS NEEDED, CALL W.S. DARLEY & CO. AT CHIPPEWA FALLS, WI. AT 800-634-7812 or 715-726-2650

DEFINITIONS

HEAD OF WATER -- vertical depth of water measured in feet or in pressure per unit or area. In hydraulics, head always represents pressure and it is expressed interchangeably in feet of water or pounds per square inch and sometimes in inches of depth of mercury.

STATIC HEAD -- the pressure that is exerted by a stationary column of water of a given height or depth.

TOTAL HEAD OR TOTAL DYNAMIC HEAD -- the maximum height above the source of supply to which the pump would elevate the water plus all the resistance to flow in the pipe or hose line.

DISCHARGE HEAD -- the pressure measured at the discharge outlet of a pump.

SUCTION HEAD -- the positive pressure measured at the suction entrance of a pump (when pumping from an elevated tank or hydrant).

VELOCITY HEAD -- the equivalent pressure represented by fluid in motion as measured by means of a Pitot Gage.

STATIC LIFT -- the vertical height of the center of the pump above the source of supply (when pump from draft).

TOTAL SUCTION LIFT -- the static lift plus the friction in suction line plus entrance losses.

NET PUMP PRESSURE -- the total dynamic head of the pump.

EFFECTIVE NOZZLE PRESSURE -- the pump discharge pressure minus hose friction plus or minus the difference in elevation above or below pump.

WATER HORSEPOWER - the theoretical power required to deliver a given quantity of water per minute against a given head.

BRAKE HORSEPOWER -- Actual power as delivered by a motor or engine to a driven machine.

PUMP EFFICIENCY -- The quotient of the water horsepower divided by brake horsepower required to produce it.

WATER HAMMER -- a series of shock waves produced in a pipeline or pump by a sudden change in water velocity. A sudden change in flow velocity can result from rapid closure of valves. A pressure wave is set up which travels back and forth in the water column at extremely high speed producing rapid vibrations that may be violent and destructive if the water column is long.

THE MAXIMUM THEORETICAL LIFT of a pump is 34 feet, which is the pressure of the atmosphere at sea level. The maximum practical total lift at sea level is 20 to 25 feet (depending on the type and condition of the pump) and this decreases with drops in barometric pressure.

OPERATING CHARACTERISTICS OF PUMPS

CENTRIFUGAL PUMPS: A centrifugal pump develops pressure by centrifugal force of the liquid rotating in the impeller wheel. The pressure developed depends upon the peripheral speed of the impeller (increasing as the square of the speed) and it remains fairly constant over a wide range of capacities up to the maximum output of the pump, if speed remains constant.

If the discharge outlet of a centrifugal pump is entirely shut off, with speed kept constant, there is a small rise in pressure, the water churns in the pump casing and the power drops to a low value. If the discharge is opened wide, with little resistance to flow the pressure drops while the capacity and power both increase to their maximum.

A centrifugal pump is an extremely simple mechanism mechanically, but rather complex hydraulically; in that many factors enter into the design of the impeller and water ways which will affect the pump's efficiency.

DISPLACEMENT PUMPS: Rotary and piston pumps are termed "Positive Displacement" pumps because each revolution displaces or discharge (theoretically) an exact amount of liquid, regardless of the resistance. The capacity is, therefore, proportional to the number of revolutions of the pump per minute and independent of the discharge pressure except as it is reduced by "slip" (leakage past the pistons or rotors). For a given speed the power is directly proportional to the head. If the discharge is completely shut off, the pressure, power, and torque climb indefinitely until the drive power is stalled or breakage occurs.

Slip is the greatest factor affecting efficiency of a displacement pump, and this factor is greatly influenced by the condition of and wears on the working parts.

IF FURTHER INFORMATION IS NEEDED, CALL W.S. DARLEY & CO. AT CHIPPEWA FALLS, WI. AT 800-634-7812 or 715-726-2650

CONVERSION FACTORS

One pound per square inch	=	2.31 feet of water
	=	2.04 inches of mercury
	=	27.7 inches of water
One foot of water	=	0.43 pounds per square inch
One inch of mercury	=	1.13 feet of water
	=	0.49 pounds per square inch
One cubic foot of water	=	62.4 pounds
	=	7.5 gallons
One gallon of water	=	231 cubic inches
	=	0.13 cubic feet
	=	8.34 pounds
	=	3.8 liters
One Imperial Gallon	=	1.2 U.S. gallons
Atmospheric Pressure (Sea Level)	=	14.8 pounds per square inch
	=	29.9 inches of mercury
	=	34 feet of water

TABLE NO. 1
NFPA 1901 TEST

Class A							
TEST No.	GPM	Recom-mended Nozzles	Min. Nozzle Press. PSI	Min. Disch. Press. PSI	Min. Net Pump Press. PSI	Disch. Lines	Suction Hose
500 GPM Pump							
1	500	1-1/2"	57	143	150	1-50"	20' of 4"
2	350	1-1/4"	58	194	200		
3	250	1"	72	245	250		
4	500	1-1/2"	57	158	165		
750 GPM Pump							
1	750	1-3/4" or 2, 1-1/4"	68 66	142	150	2-50'	
2	525	1-1/2"	62	193	200	or	20' of 4-1/2"
3	375	1-1/4"	66	244	250	2-100'	
4	750	1-3/4" or 2, 1-1/4"	68 66	157	165	Siamesed	
1000 GPM Pump							
1	1000	1, 2" or 2, 1-1/2"	71 57	142	150	2-50'	
2	700	1-3/4" or 2, 1-1/4"	60 58	193	200	or	20' of 5"
3	500	1-1/2"	57	244	250	3-100'	
4	1000	1, 2" or 2, 1-1/2"	71 57	157	165	Siamesed	
1250 GPM Pump							
1	1250	2-1/4" or 2, 1-1/2"	69 88	143	150	3-50'	
2	875	1, 2" or 2, 1-3/8"	55 61	194	200	or	
3	625	1-1/2"	88	245	250	3-100'	20' of 6"
4	1250	2-1/4" or 2, 1-1/2"	69 88	158	165	and 1-50' Siamesed	

Min. discharge pressures listed above are for pumps operating with full 10’ static suction lift. These pressures must be increased by 1 PSI for each 2.3 ft. less than 10’ of lift.

TABLE NO. 1
NFPA 1901 TEST

Class A							
TEST No.	GPM	Recom-Mended Nozzles	Min. Nozzle Press. PSI	Min. Disch. Press. PSI	Min. Net Pump Press. PSI	Disch. Lines	Suction Hose
1500GPM Pump							
1	1500	2, 1-3/4" or 3, 1-1/2"	68 57	142	150	3-50'	20' of
2	1050	1, 2" or 2, 1-1/2"	78 62	194	200	or	6" Min
3	750	1, 1-3/4" or 2, 1-1/4"	68 66	245	250	3-100' and 1-50'	or (2) 20' of
4	1500	2, 1-3/4" or 3, 1-1/2"	68 57	157	165	Siamesed	6" Max
1750 GPM Pump							
1	1750	2, 2" or 3, 1-1/2"	55 76	143	150	4-50'	(2) 20' of 6"
2	1225	2, 1-5/8" or 2, 1-1/2"or 3, 1-1/4"	61 84 79	194	200	or	
3	875	1, 2"or 2, 1-3/8"	55 61	245	250	4-100'	
4	1750	2, 2" or 3, 1-1/2"	55 76	158	165		
2000 GPM Pump							
1	2000	2, 2" or 4, 1-1/2"	71 57	147	150	4-50'	(2) 20' of 6"
2	1400	2, 1-3/4"or 3, 1-1/2"	60 49	199	200	or	
3	1000	1, 2" or 2, 1-1/2"	71 57	249	250	4-100'	
4	2000	2, 2" or 4, 1-1/2"	71 57	163	165		

Min. discharge pressures listed above are for pumps operating with full 10' static suction lift. These pressures must be increased by 1 PSI for each 2.3 ft. less than 10' of lift.

IF FURTHER INFORMATION IS NEEDED, CALL W.S. DARLEY & CO. AT CHIPPEWA FALLS, WI. AT 800-634-7812 or 715-726-2650

TABLE NO. 2
DISCHARGE FROM SMOOTH BORE NOZZLE
Pressures measured by Pitot gage.

Nozzle Pressure PSI	1/4	3/8	1/2	5/8	3/4	7/8	1	1 1/8	1 1/4	1 3/8	1 1/2	1 5/8	1 3/4	2	2 1/4
	GALLONS PER MINUTE DELIVERED														
5	4	9	16	26	37	50	66	84	103	125	149	175	203	266	337
6	4	10	18	28	41	55	72	92	113	137	163	192	223	292	369
7	4	11	19	30	44	59	78	99	122	148	176	207	241	315	399
8	5	11	21	32	47	64	84	106	131	158	188	222	257	336	427
9	5	12	22	34	50	67	89	112	139	168	200	235	273	357	452
10	6	13	23	36	53	71	93	118	146	177	211	248	288	376	477
12	6	15	25	40	58	78	102	130	160	194	231	271	315	412	522
14	7	15	27	43	63	84	110	140	173	210	249	293	340	445	564
16	7	16	29	46	67	90	118	150	185	224	267	313	364	475	603
18	7	17	31	49	71	95	125	159	196	237	283	332	386	504	640
20	8	18	33	51	75	101	132	167	206	250	298	350	407	532	674
22	8	19	34	54	79	105	139	175	216	263	313	367	427	557	707
24	8	20	36	56	82	110	145	183	226	275	327	384	446	582	739
26	9	21	37	59	85	115	151	191	235	286	340	400	464	606	769
28	9	21	39	61	89	119	157	198	244	297	353	415	481	629	799
30	10	22	40	63	92	123	162	205	253	307	365	429	498	651	826
32	10	23	41	65	95	127	167	212	261	317	377	443	514	673	854
34	11	23	43	67	98	131	172	218	269	327	389	457	530	693	880
36	11	24	44	69	100	135	177	224	277	336	400	470	546	713	905
38	11	25	45	71	103	138	182	231	285	345	411	483	561	733	930
40	11	26	46	73	106	142	187	237	292	354	422	496	575	752	954
42	11	26	47	74	109	146	192	243	299	363	432	508	589	770	978
44	12	27	49	76	111	149	196	248	306	372	442	520	603	788	1000
46	12	28	50	78	114	152	200	254	313	380	452	531	617	806	1021
48	12	28	51	80	116	156	205	259	320	388	462	543	630	824	1043
50	13	29	52	81	118	159	209	265	326	396	472	554	643	841	1065
52	13	29	53	83	121	162	213	270	333	404	481	565	656	857	1087
54	13	30	54	84	123	165	217	275	339	412	490	576	668	873	1108
56	13	30	56	86	125	168	221	280	345	419	499	586	680	889	1129
58	13	31	56	87	128	171	225	285	351	426	508	596	692	905	1149
60	14	31	57	89	130	174	229	290	357	434	517	607	704	920	1168
62	14	32	58	90	132	177	233	295	363	441	525	617	716	936	1187
64	14	32	59	92	134	180	237	299	369	448	533	627	727	951	1206
66	14	33	60	93	136	182	240	304	375	455	542	636	738	965	1224
68	14	33	60	95	138	185	244	308	381	462	550	646	750	980	1242
70	15	34	61	96	140	188	247	313	386	469	558	655	761	994	1260
72	15	34	62	97	142	191	251	318	391	475	566	665	771	1008	1278
74	15	35	63	99	144	193	254	322	397	482	574	674	782	1023	1296
76	15	35	64	100	146	196	258	326	402	488	582	683	792	1036	1313
78	15	36	65	101	148	198	261	330	407	494	589	692	803	1050	1330

TABLE NO. 2
DISCHARGE FROM SMOOTH BORE NOZZLE
Pressures measured by Pitot gage.

Nozzle Pressure PSI	1/4	3/8	1/2	5/8	3/4	7/8	1	1 1/8	1 1/4	1 3/8	1 1/2	1 5/8	1 3/4	2	2 1/4
	GALLONS PER MINUTE DELIVERED														
80	16	36	66	103	150	201	264	335	413	500	596	700	813	1063	1347
82	16	37	66	104	152	204	268	339	418	507	604	709	823	1076	1364
84	16	37	67	105	154	206	271	343	423	513	611	718	833	1089	1380
86	16	37	68	107	155	208	274	347	428	519	618	726	843	1102	1396
88	16	38	69	108	157	211	277	351	433	525	626	735	853	1115	1412
90	17	39	70	109	159	213	280	355	438	531	633	743	862	1128	1429
92	17	39	70	110	161	215	283	359	443	537	640	751	872	1140	1445
94	17	39	71	111	162	218	286	363	447	543	647	759	881	1152	1460
96	17	40	72	113	164	220	289	367	452	549	654	767	890	1164	1476
98	17	40	73	114	166	223	292	370	456	554	660	775	900	1176	1491
100	18	41	73	115	168	225	295	374	461	560	667	783	909	1189	1506
105	18	42	75	118	172	230	303	383	473	574	683	803	932	1218	1542
110	19	43	77	121	176	236	310	392	484	588	699	822	954	1247	1579
115	19	43	79	123	180	241	317	401	495	600	715	840	975	1275	1615
120	19	44	80	126	183	246	324	410	505	613	730	858	996	1303	1649
125	20	45	82	129	187	251	331	418	516	626	745	876	1016	1329	1683
130	20	46	84	131	191	256	337	427	526	638	760	893	1036	1356	1717
135	21	47	85	134	195	262	343	435	536	650	775	910	1056	1382	1750
140	21	48	87	136	198	266	350	443	546	662	789	927	1076	1407	1780
145	21	49	88	139	202	271	356	450	556	674	803	944	1095	1432	1812
150	22	50	90	141	205	275	362	458	565	686	817	960	1114	1456	1843

TABLE NO. 3
Approximate Discharge Flow From Different Nozzles At the end of Fifty Feet of Average, 2 1/2" Rubber Lined Fire Hose, for Various Pump Pressures with Discharge Valve Wide Open

PUMP	SIZE	OF	NOZZLE	&	GALLONS	PER	MINUTE
PRESSURE LBS	3/4	7/8	1	1 1/8	1 1/4	1 3/8	1 1/2
30	90	119	153	187	217	250	282
40	103	137	177	216	253	290	327
50	115	153	198	242	284	325	367
60	126	168	216	265	311	357	402
70	136	182	234	287	337	385	435
80	145	194	250	308	361	414	465
90	154	206	265	325	383	437	492
100	162	217	280	343	405	462	520
110	171	228	295	360	425	485	549
120	179	239	307	377	444	510	572
130	186	249	318	392	462	530	596
140	193	258	330	407	480	549	618
150	200	267	341	421	497	567	
175	215	288	374	455	538		
200	230	309	395	486			
225	243	328	420				
250	257	345					

This table is offered as an aide in testing pump performance where facilities for accurate measurement of capacity are not available. The capacities given above are conservative, and will not vary more than 5% from actual capacities with any of the standard hose that might be used.

TABLE NO. 4

Pump or Hydrant Pressure required to give Effective Nozzle Pressure through various Lengths of Rubber Lined Hose.

Size of Hose		1	1 1/2			2		2 1/2					3	
Size of Nozzle		1/4	3/8	1/2	5/8	5/8	3/4	3/4	7/8	1	1 1/4	1 1/2	1 1/4	1 1/2
Nozzle Press PSI	Length of Hose Feet	PUMP OR HYDRANT PRESSURE - PSI												
40	100	45	43	48	60	42	50	44	46	51	64	88	51	62
	200	49	46	56	79	43	60	47	52	60	86	130	59	78
	400	58	51	73	118	46	79	53	62	79	129	212	75	110
	600	67	57	89	158	50	99	59	74	97	172		92	143
	800	76	62	106	196	53	119	65	85	116	215		108	176
	1000	85	68	122	235	56	138	72	96	134	258		124	208
	1500	108	72	142		64	187	87	118	181			165	
	2000	130	96	204		72	226	103	151	227			205	
60	100	67	64	72	89	63	73	65	69	75	95	132	76	92
	200	74	68	84	117	65	86	70	78	89	126	196	88	115
	400	87	76	107	173	69	112	79	94	116	188		111	161
	600	101	85	131	231	74	138	88	111	143	250		135	208
	800	114	93	153		79	164	98	127	170			158	
	1000	127	101	178		83	190	107	143	197			182	
	1500	161	122	237		95	155	130	184	264				
	2000	195	142			106		153	225					
80	100	88	85	96	117	83	99	87	92	99	126	175	101	103
	200	97	91	112	154	86	117	93	103	115	167		116	154
	400	115	102	143	228	92	154	105	125	148	249		147	
	600	132	112	174		98	191	117	147	181			178	
	800	150	123	206		104	228	129	167	214			209	
	1000	167	134	238		110		141	191	247				
	1500	211	161			125		171	245					
	2000	254	188			140		201						
100	100	111	107	120	146	104	123	108	115	125	157		126	152
	200	122	113	139	192	108	145	116	128	150	209		146	190

	400	143	127	177	284	115	190	130	154	200			184	
	600	165	140	217		123	235	145	180	250			223	
	800	186	154	256		131		159	206					
	1000	208	167			138		174	232					
	1500	262	200			157		211						
	2000		234			175		253						

TABLE NO. 5
REACH OF FIRE STREAMS

Size of Nozzle	1/4"	3/8"	1/2"	5/8"	3/4"	7/8"	1"	1-1/4"	1-1/2"
NOZZLE PRESSURE	**EFFECTIVE VERTICAL REACH - Feet**								
40	30	35	40	50	59	62	64	65	69
60	35	40	45	60	74	77	79	84	87
80	38	42	48	65	81	85	89	94	96
100	40	44	50	68	84	89	94	100	102
NOZZLE PRESSURE	**MAXIMUM VERTICAL REACH - Feet**								
40	60	65	70	75	78	79	80	80	80
60	70	75	85	95	105	106	108	110	110
80	78	83	95	105	117	125	132	140	140
100	80	88	100	110	122	135	145	155	155
NOZZLE PRESSURE	**EFFECTIVE HORIZONTAL REACH - Feet**								
40	20	25	30	40	44	50	55	62	66
60	25	32	37	50	54	61	67	75	80
80	28	35	40	57	62	70	76	84	88
100	30	37	42	60	66	76	84	93	95
NOZZLE PRESSURE	**MAXIMUM HORIZONTAL REACH - Feet**								
40	65	80	90	100	108	120	125	138	140
60	80	95	95	120	127	142	156	176	183
80	90	105	105	135	143	160	175	201	210
100	95	110	110	140	153	180	205	215	223

TABLE NO. 6
Friction Loss in Fire Hose
Loss in PSI per 100 Feet of Hose

SIZE HOSE	LINEN HOSE			BEST RUBER LINED HOSE							
G.P.M.	1 1/2	2	2 1/2	3/4	1	1 1/2	2	2 1/2	3	3 1/2	(2)-2 1/2
10	1.0			13.5	3.5	0.5	.1				
15	2.2			29.0	7.2	1.0	0.3				
20	3.6			50.0	12.3	1.7	0.4				
25	5.5			75.0	18.5	2.6	0.6				
30	8.0	1.9		105.0	26.0	3.6	0.9				
40	13.0	3.2		180.0	44.0	6.1	1.5				
50	20.0	4.9	1.6		67.0	9.3	2.3				
60	28.0	7.0	2.2		96.0	13.5	3.3				
70	37.0	9.0	3.1		131.0	17.0	4..3				
80	47.0	11.5	3.8		171.0	23.0	5.6				
90	59.0	14.5	5.0		217.0	29.0	7.0				
100	72.0	17.5	5.9		268.0	33.0	8.4				
120		25.0	8.3		386.0	47.0	11.7				
140		34.0	11.0			62.0	16.0	5.2	2.0	0.9	1.4
160		43.0	14.0			78.0	20.0	6.6	2.6	1.2	1.9
180		53.0	17.7			97.0	25.0	8.3	3.2	1.5	2.3
200		63.0	21.5			121.0	30.6	10.1	3.9	1.8	2.8
220						146.0		12.0	4.6	2.1	3.3
240						173.0		14.1	5.4	2.5	3.9
260						204.0		16.4	6.3	2.9	4.5
280						237.0		18.7	7.2	3.3	5.2
300						272.0		21.2	8.2	3.7	5.9
320								23.8	9.3	4.2	6.6
340								26.9	10.5	4.7	7.4
360								30.0	11.5	5.2	8.3
380								33.0	12.8	5.8	9.2
400								36.2	14.1	6.3	10.1
425								40.8	15..7	7.0	11.3
450								45.2	17.5	7.9	12.5
475								50.0	19.3	8.7	13.8
500								55.0	21.2	9.5	15.2
525									23.2	10.5	16.6
550									25.2	11.4	18.1
575									27.5	12.4	19.6
600									29.9	13.4	21.2
650									34.5	15.5	24.8
700									39.5	17.7	28.3
750									45.0	20.1	32.2
800									50.5	22.7	36.2
850									56.5	25.4	40.7
900									63.0	28.2	45.2
1000									76.5	34.3	55.0

Losses in rough walled, rubber hose may be 50% higher than values given above.

TABLE NO. 7
Friction Loss in 15-year-old Steel Pipe
Loss in PSI per 100 Feet of Pipe

PIPE SIZE	1/8	1/4	3/8	1/2	3/4	1	1 1/4	1 1/2	2	2 1/2	3	4	6	8
G.P.M.														
1	52.0	12.0	2.8	0.9										
2		45.0	10.0	3.2	4.0									
5			55.0	18.0	4.5	1.4	0.4							
10				64.0	16.0	5.0	1.3	0.6						
15				135.0	34.0	11.0	2.7	1.3	0.5					
20					59.0	18.0	4.7	2.2	0.8					
25					89.0	27.0	7.1	3.4	1.2					
30					125.0	39.0	10.0	4.7	1.7	0.6				
35						51.0	13.0	6.3	2.2	0.7				
40						66.0	17.0	8.0	2.9	0.9				
45						82.0	21.0	10.0	3.6	1.2				
50						99.0	26.0	12.0	4.3	1.4	0.6			
60						140.0	38.0	17.0	6.1	2.0	0.8			
70							49.0	23.0	8.0	2.7	1.1			
80							63.0	29.0	10.0	3.4	1.5			
90							78.0	36.0	13.0	4.3	1.8			
100							96.0	44.0	15.0	5.1	2.2	0.5		
125							144.0	66.0	24.0	7.8	3.3	0.8		
150								93.0	33.0	11.0	4.6	1.1		
175								125.0	44.0	15.0	6.1	1.5		
200									56.0	19.0	7.8	1.9		
250									84.0	28.0	12.0	2.9		
300									114.0	40.0	16.0	4.0	0.6	
350										53.0	22.0	5.4	0.8	
400										68.0	28.0	6.9	1.0	
450										84.0	35.0	8.6	1.2	
500										102.0	42.0	10.0	1.4	0.4
600											60.0	15.0	2.1	0.6
800												25.0	3.5	1
1000												37.0	5.2	1.3
1500													11.0	2.7
2000													19.0	4.7
2500													29.0	7.1
3000														10

TABLE NO. 8
Resistance of Fittings
Equivalent Lengths of Straight Pipe - Feet

PIPE SIZE	1/2	3/4	1	1 1/4	1 1/2	2	2 1/2	3	4	5	6	8
Gate Valve	0.4	0.6	0.8	1.1	1.4	1.8	2.2	2.8	4.1	5.3	6.7	9.4
Global Valve	3.0	4.5	6.0	8.5	10.5	14.0	17.0	22.0	32.0	42.0	53.0	75.0
Angle Valve	1.4	2.0	2.7	3.8	4.8	6.3	7.9	10.5	14.5	18.5	23.0	33.0
Std. Elbow	1.1	1.5	2.0	2.8	3.5	4.7	5.8	7.5	11.0	14.0	18.0	24.0
45 Elbow	0.6	0.8	1.0	1.4	1.6	2.1	2.5	3.1	4.2	5.2	6.3	8.5
Long Sweep EI Str Run Tee	0.5	0.8	1.0	1.4	1.7	2.3	2.8	3.7	5.3	7.0	9.0	12.5
Std. Tee Thru Side Outlet	2.1	2.9	3.9	5.5	6.9	9.1	11.6	14.8	21.0	27.0	34.0	49.0
SuddenEnlarg or contraction	1.8	2.5	3.2	4.2	5.0	6.5	7.5	9.5	13.0	16.0	19.0	25.0
Entrance to Pipe	1.0	1.3	1.6	2.2	2.6	3.3	3.9	4.9	6.5	8.2	10.0	13.0

TABLE NO. 9
To Convert Pounds per Square Inch to Feet Elevation of Water

Feet	5	10	15	20	25	30	35	40	45	50	60	70	80	90
Pounds	2.2	4.3	6.5	8.7	11	13	15	17	20	22	26	30	35	39
Feet	**100**	**120**	**130**	**140**	**150**	**160**	**170**	**180**	**190**	**200**	**220**	**240**	**260**	**280**
Pounds	**43**	**52**	**56**	**61**	**65**	**69**	**74**	**78**	**82**	**87**	**95**	**104**	**113**	**121**
Feet	300	320	340	360	380	400	425	450	475	500	525	550	600	700
Pounds	130	139	147	156	165	173	184	195	206	217	227	238	260	303

Table NO. 10
American National Fire Hose Connection Screw Thread - NH

Size of Hose	3/4	1	1 1/2	2 1/2	3	3 1/2	4	4 1/2	5	6
Thr'ds per inch	8	8	9	7.5	6	6	4	4	4	4
Thread Designation	0.75-8 NH	1-8 NH	1.5-9 NH	2.5-7.5 NH	3-6 NH	3.5-6 NH	4-4 NH	4.5-4 NH	5-4 NH	6-4 NH
Max. O.D. Male	1.3750	1.3750	1.9900	3.0686	3.6239	4.2439	5.0109	5.7609	6.2600	7.0250

Ref. NFPA 1963

Underwriters Nozzle Tip Thread: 2.1875 O.D. - 12 threads per inch.

IF FURTHER INFORMATION IS NEEDED, CALL W.S. DARLEY & CO. AT CHIPPEWA FALLS, WI. AT 800-634-7812 or 715-726-2650

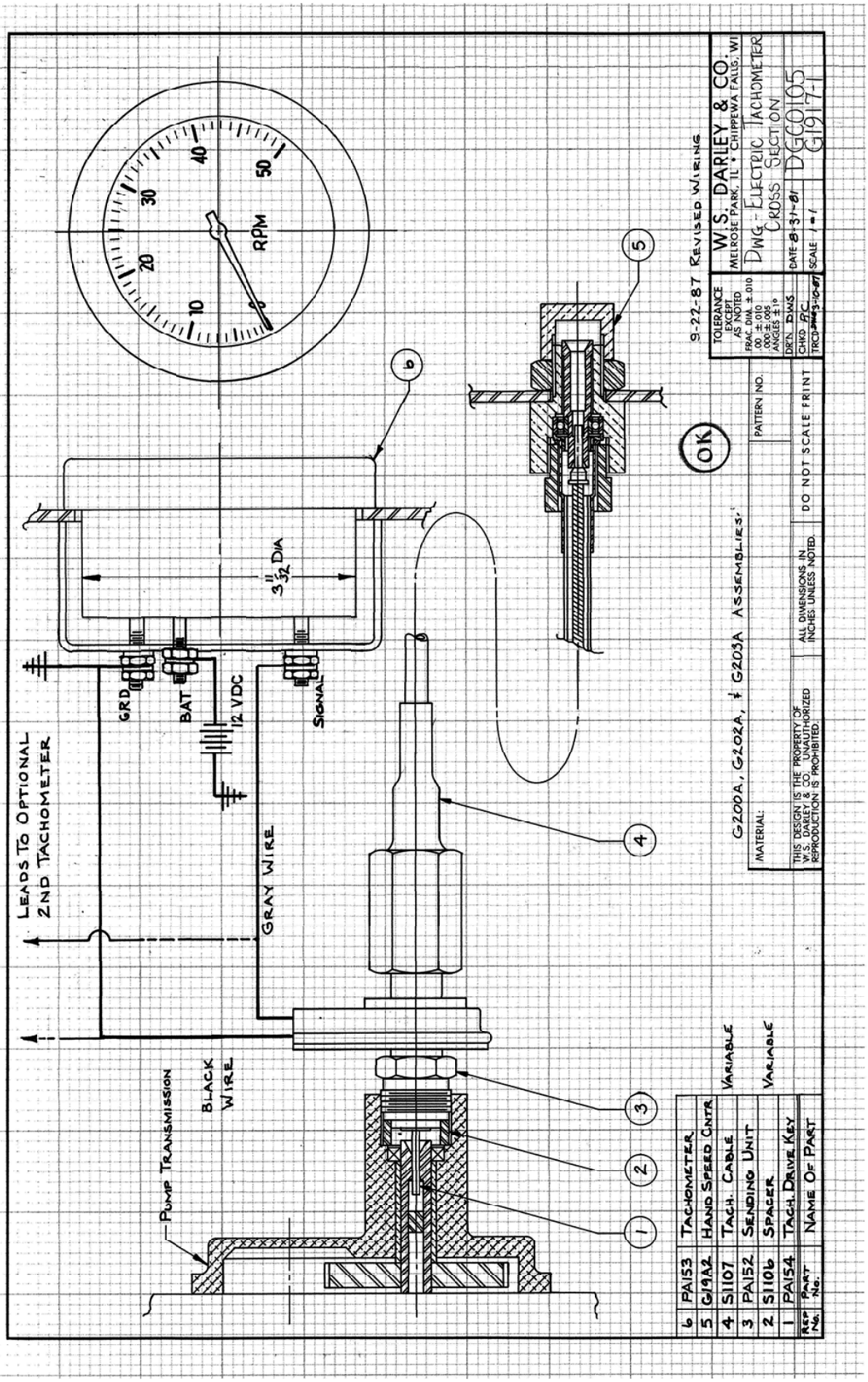
RPM
10
20
30
40
50
3 11/32 DIA
GRD
BAT
12 VDC
SIGNAL
LEADS TO OPTIONAL 2ND TACHOMETER
GRAY WIRE
BLACK WIRE
PUMP TRANSMISSION
1
2
3
4
5
6
9-22-87 REVISED WIRING
OK
G200A, G202A, & G203A ASSEMBLIES
MATERIAL:
PATTERN NO.
THIS DESIGN IS THE PROPERTY OF W.S. DARLEY & CO. UNAUTHORIZED REPRODUCTION IS PROHIBITED.
ALL DIMENSIONS IN INCHES UNLESS NOTED.
DO NOT SCALE PRINT
TOLERANCE EXCEPT AS NOTED
FRAC. DIM. ±.010
.00 ±.010
.000 ±.005
ANGLES ±1°
DRN. DWS
CHKD. RC
TRCD
W.S. DARLEY & CO.
MELROSE PARK, IL • CHIPPEWA FALLS, WI
DWG: ELECTRIC TACHOMETER CROSS SECTION
DATE 8-31-81
SCALE 1=1
DGC0105
G1917-1
REF No. | PART No. | NAME OF PART
6 | PA153 | TACHOMETER
5 | G192 | HAND SPEED CNTR.
4 | S1107 | TACH. CABLE | VARIABLE
3 | PA152 | SENDING UNIT
2 | S1106 | SPACER | VARIABLE
1 | PA154 | TACH. DRIVE KEY

W.S. DARLEY & CO.

SWITCHING DIESEL TACHOMETER

1. CAUTION: Disconnect the battery during installation. Tighten nuts on back clamp only slightly more than you can tighten them with our fingers. Six inch pounds of torque is sufficient. Over tightening may result in damage to the instrument and may void your warranty!

2. Location: The tachometer should be located at least 18" from a magnetic compass. Some interference (erratic operation) may be noticed on the tachometer during radio transmission. This will neither damage a Faria tachometer nor affect accuracy when not transmitting.

3. Be certain to use insulated wire not less than 18 gauge that is approved for marine use. It is recommended that insulated wire terminals, preferably ring type, be used on all connections to the tachometer except for the light which requires a 1/4" female blade terminal.

4. The tach sender, DK-3 or equivalent, must be used in conjunction with the tachometer. One DK-3 sender will operate two tachometers. Mount the sender to the pump at the mechanical tachometer drive take-off using the correct drive tip (supplied with DK-3) to properly engage the sender.

5. Using a small screwdriver, SLIGHTLY depress and turn the selector switch on the back of the tachometer to match the tachometer drive take-off (see label on side of tachometer). DEPRESSING THE SWITCH TOO HARD MAY CAUSE DAMAGE TO THE TACHOMETER. Be sure the selector switch has locked into the detent at the correct position by slightly rotating the switch back and forth with the screwdriver. (PTO Pump tach ratio = 1/2, Midship Pump tach ratio = 1/1).

6. Cut a 3-3/8" diameter hole in the dash and mount the tach with back clamp supplied.

7. Connect a wire to the tach stud marked "BAT" (battery) and secure with nut and lockwasher. Connect opposite end of the 12 VDC circuit that is activated by the ignition switch.

8. Connect a wire to the tach stud marked "SIGNAL" and secure with a nut and lockwasher. Connect the opposite end to the gray wire of the diesel tachometer sender. Connect the black wire of the diesel tachometer sender to the engine ground.

9. Connect a wire to the tach stud marked "GND" (ground) and secure with a nut and lockwasher. Connect opposite end to the electrical ground.

10. Connect the blade terminal adjacent to the twist-out light assembly to the positive "+" side of the vehicle's instrument lighting circuit. No separate ground is required for lighting.

11. Reconnect the battery.

12. NOTE: To change light bulb, twist black socket assembly one-eighth (1/8) turn counter clockwise until it pops out. Bulb pulls straight out of socket assembly. It is a GE #158 instrument lamp.

IF FURTHER INFORMATION IS NEEDED, CALL W.S. DARLEY & CO. AT CHIPPEWA FALLS, WI. AT 800-634-7812 or 715-726-2650