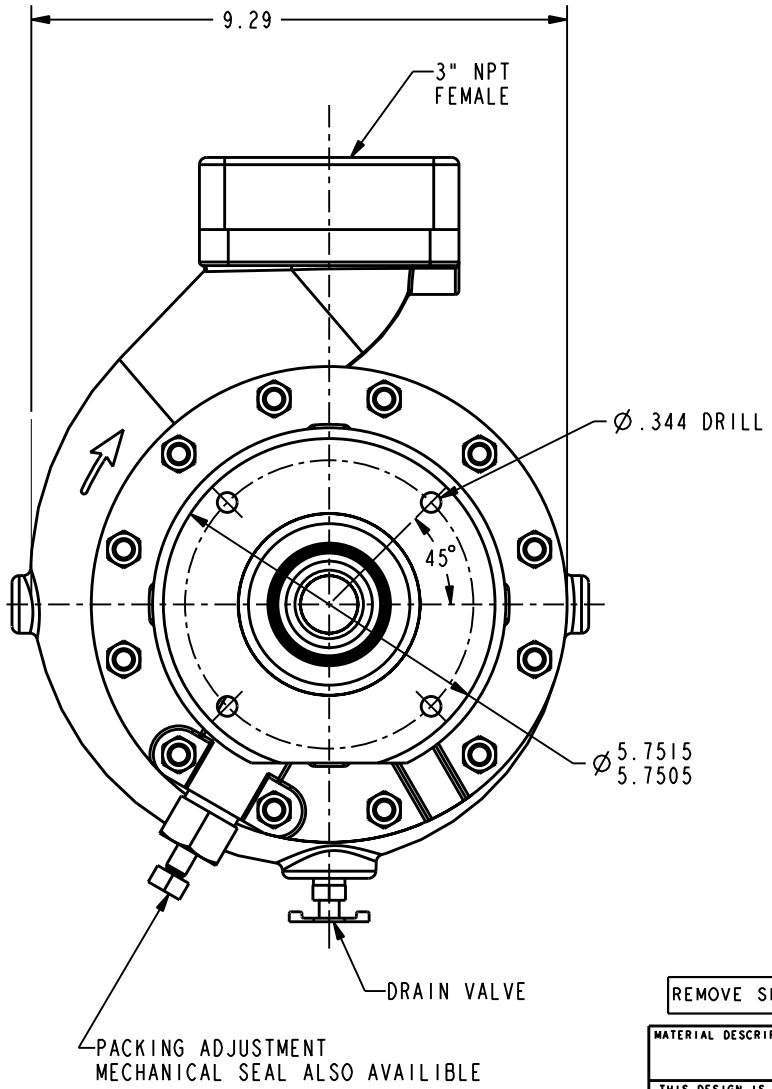

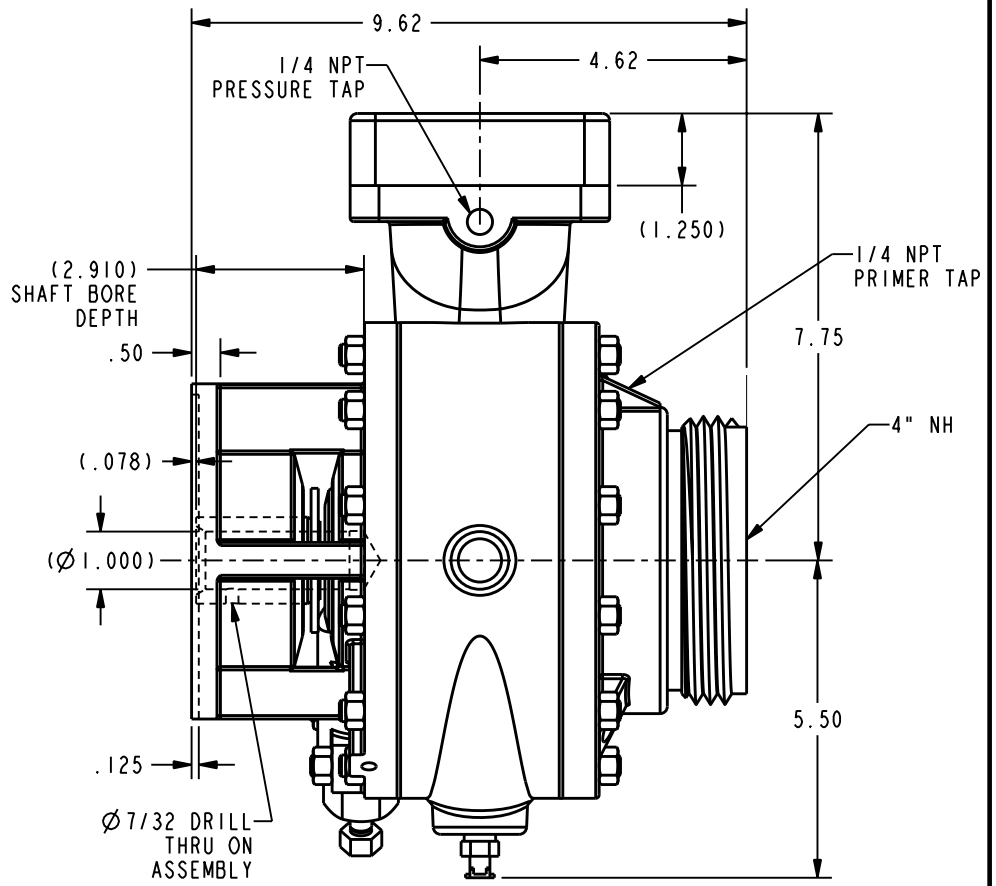

REVISIONS				
LTR	DESCRIPTION	DATE	CHG NO.	APPR'D

MODEL	MDL CREATED	SHEET	
PH00206	11MAR2008	1/1	B

REMOVE SHARP EDGES

INCH [MILLIMETER]

THIRD ANGLE PROJECTION

OLD PART NO.

MATERIAL DESCRIPTION: PH00206

MATERIAL NO.

PATTERN NO.

TOLERANCE EXCEPT AS NOTED .00 ±.03 .000 ±.010 ANGLES ±1°

W.S. Darley & Co.
ITASCA, IL - CHIPPEWA FALLS, WI

DWG - HE PORTABLE, NO ENGINE DIMENSIONAL

DR'N MWE
CHKD TED
TRCD

DATE 11MAR2008
SCALE 1/2

DHD1108

THIS DESIGN IS THE PROPERTY OF W.S. DARLEY AND CO. - UNAUTHORIZED REPRODUCTION IS PROHIBITED

ALL DIMENSIONS IN INCHES UNLESS NOTED

DO NOT SCALE PRINT

NAME:AAN OBJECT:DHD1108 DATE:15-Jan-09 09:42:21