REVISIONS				
LTR	DESCRIPTION	DATE	CHG NO.	APPR'D

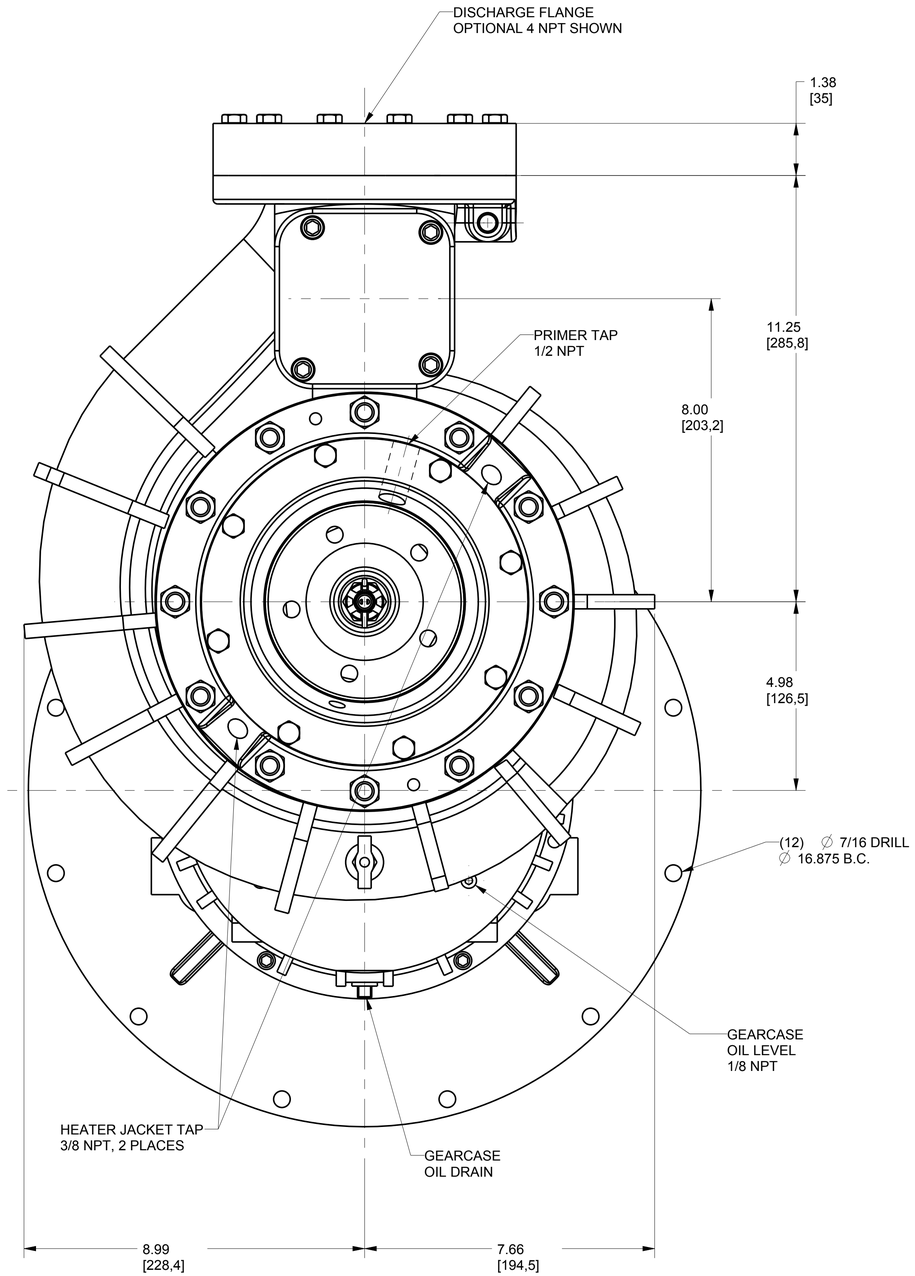

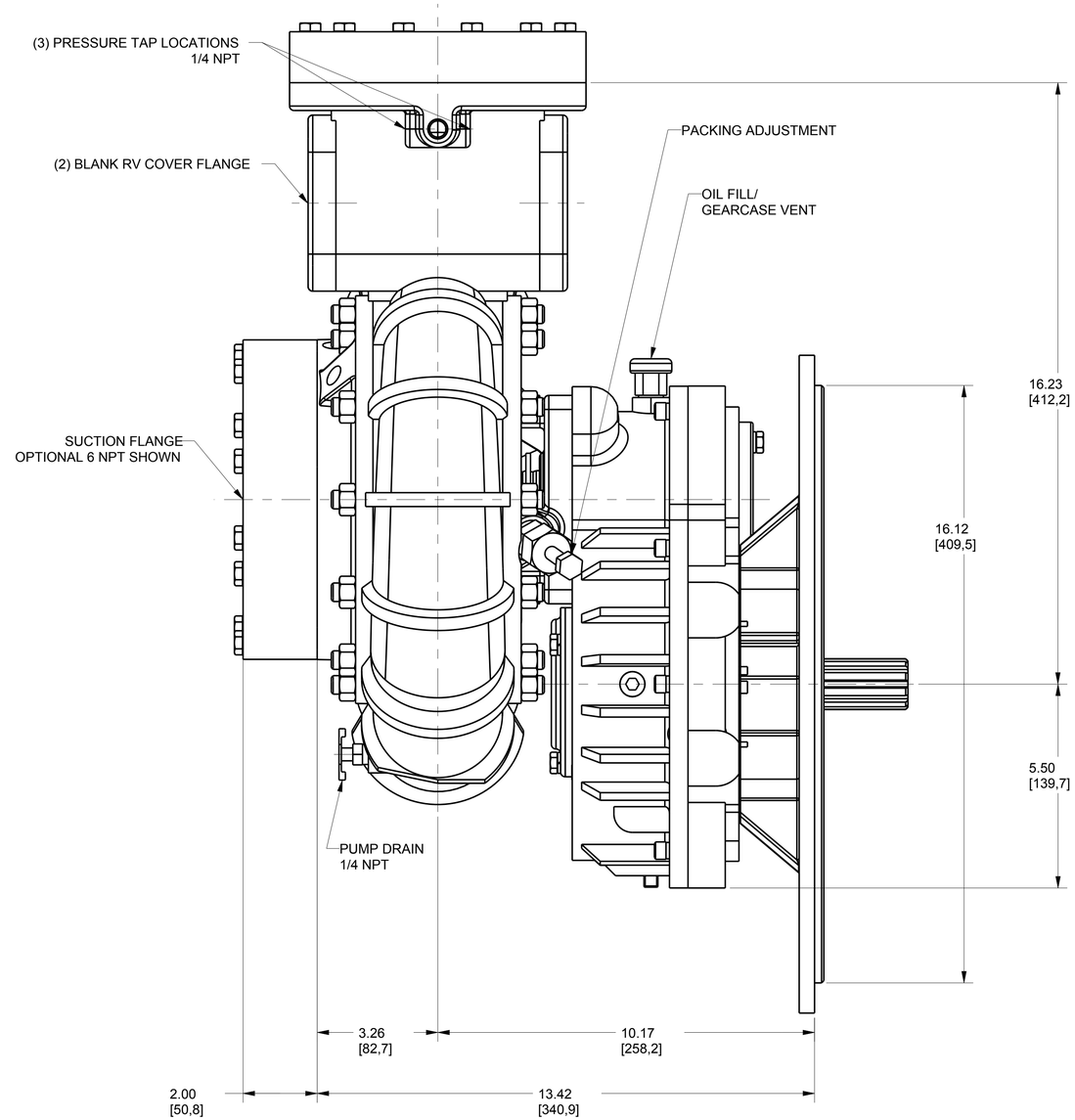

APPOXIMATE WEIGHT 235 lbs [106 kg] PLUS ENGINE WEIGHT
VARIES WITH SAE ADAPTER AND GEAR RATIO

MODEL NAME	MDL CREATED	SHEET	
DLD1200	7/13/04	1/1	D

REMOVE SHARP EDGES

INCH
[MILLIMETER]

THIRD ANGLE PROJECTION

OLD PART NO.

TOLERANCE EXCEPT AS NOTED
.00 ±.03
.000 ±.010
ANGLES ±1°

W.S. Darley & Co.
ITASCA, IL - CHIPPEWA FALLS, WI

DWG - LSE
DIMENSIONAL

MATERIAL DESCRIPTION:
-

MATERIAL NO.
-

PATTERN NO.
-

THIS DESIGN IS THE PROPERTY OF W.S. DARLEY AND CO. - UNAUTHORIZED REPRODUCTION IS PROHIBITED

ALL DIMENSIONS IN INCHES UNLESS NOTED

DO NOT SCALE PRINT

DR'N JSS
CHKD TED
TRCD

DATE 13-Jul-04
SCALE 1/2

DLD1200